Ultra Lightweight Reinforcement for Advanced High-Strength Steel Body and Closures

Mansour Mirdamadi
Deep Wang

Dow Automotive Systems

Presentation Outline

- Introduction to BETAMATE™ epoxy Light Weight Reinforcement (LWR)
- LWR material performance attributes
- Component testing studies
- LWR CAE validation studies
- Case studies
- Conclusions

BETAMATE Light Weight Reinforcement (LWR)

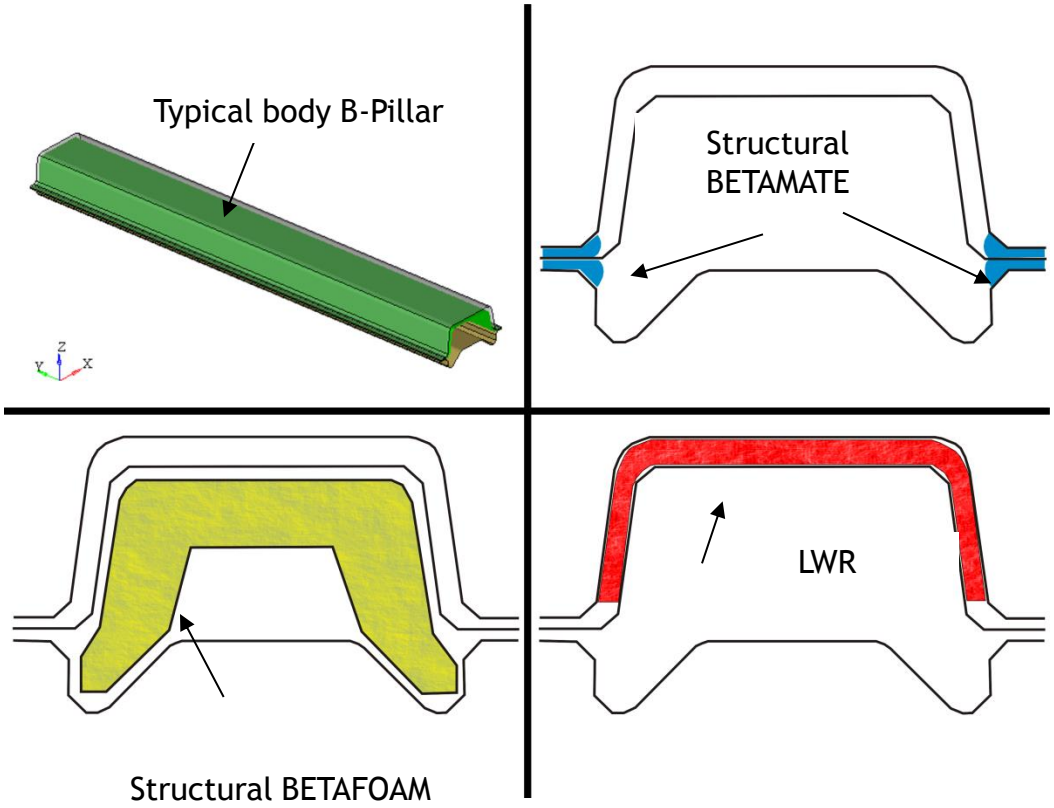

- What is LWR
  - Body shop applied BETAMATE epoxy material
  - Developed based on characteristics of highly toughened epoxy based adhesive
  - Designed to have expansion characteristics of 150%
  - Designed joint BIW substrates having gaps up to 15 mm
  - Highly mass efficient solution
  - Provide crashworthiness and body stiffness improvement
  - Application method
    - Stream
    - Swirl
    - Bead

BETAMATE LWR Expansion Sensitivity

Dow Automotive Systems

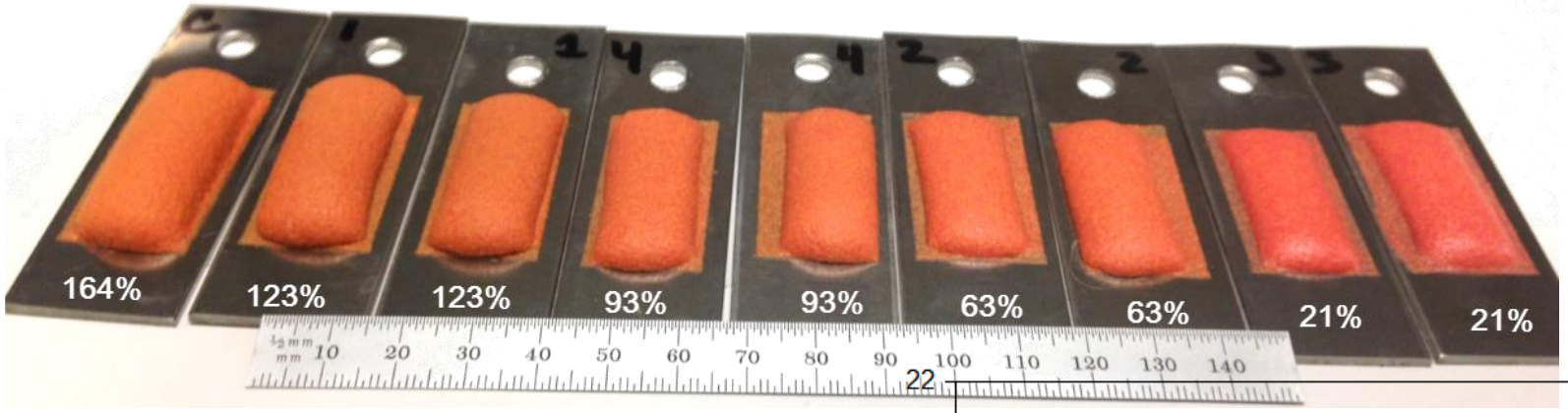

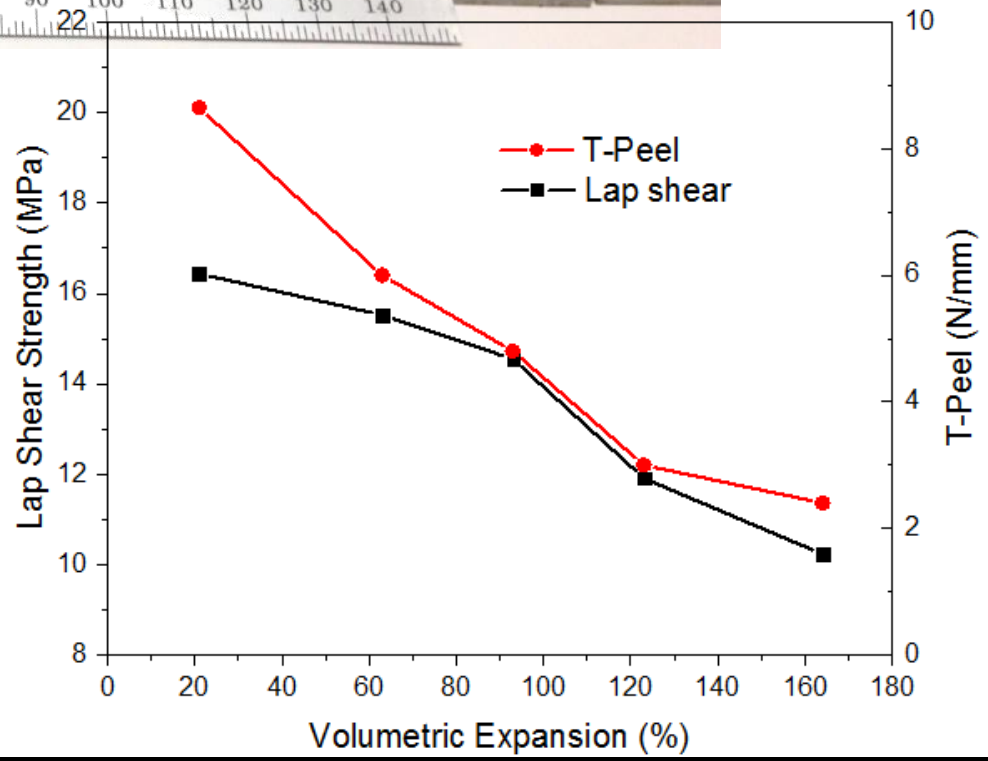

Substrate: 0.8mm HDG steel,
Temperature exposure 30' @ 170°C
Bond thickness 0.25mm

BETAMATE LWR Expansion Sensitivity

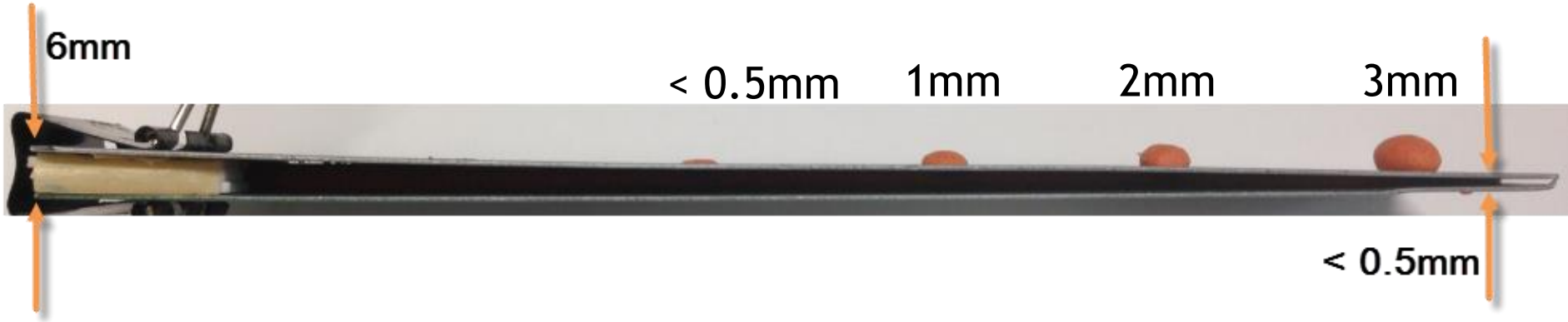

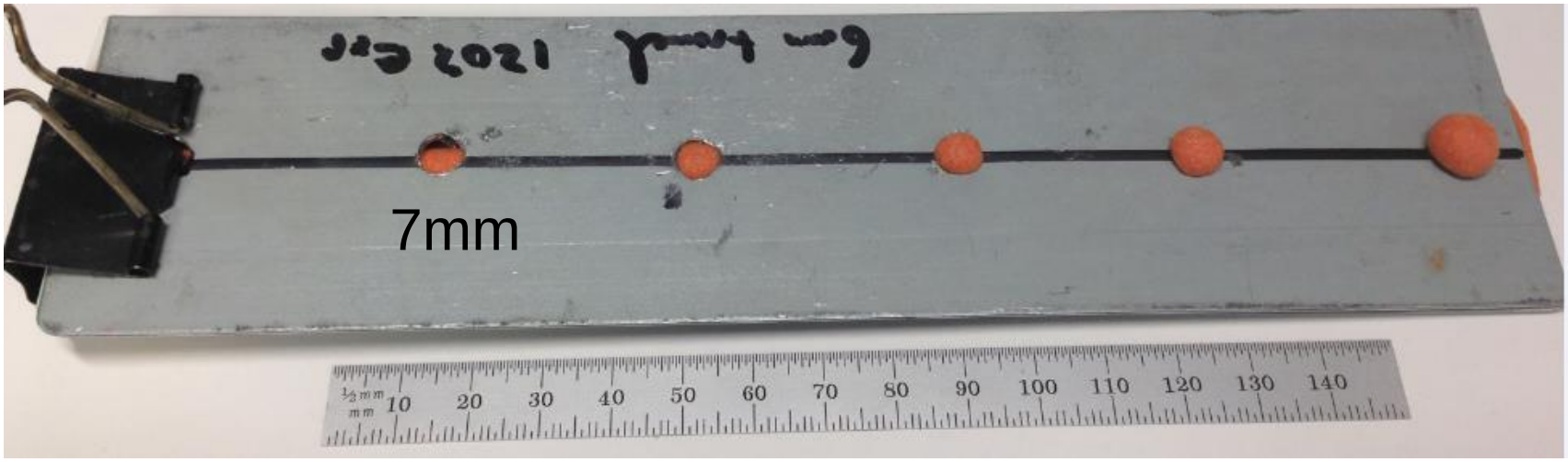

BETAMATE LWR Toughness Performance

Wedge impact peel performance of 9.0 N/mm
Cohesive failure mode
Plastic deformation of the substrate demonstrates BETAMATE LWR toughness

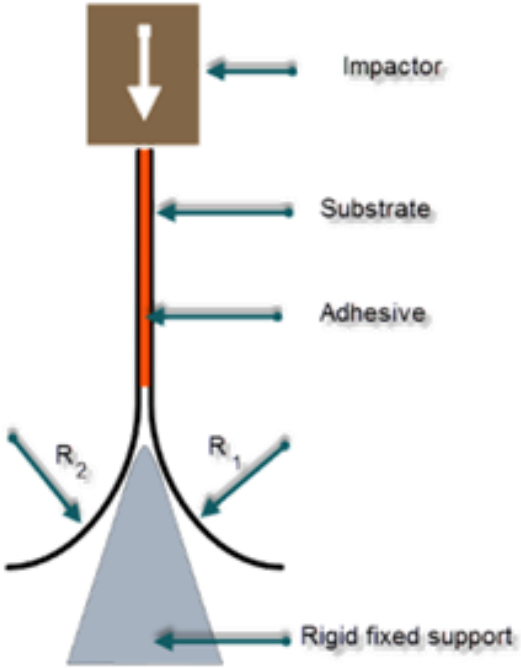

Class-A Read Through Studies

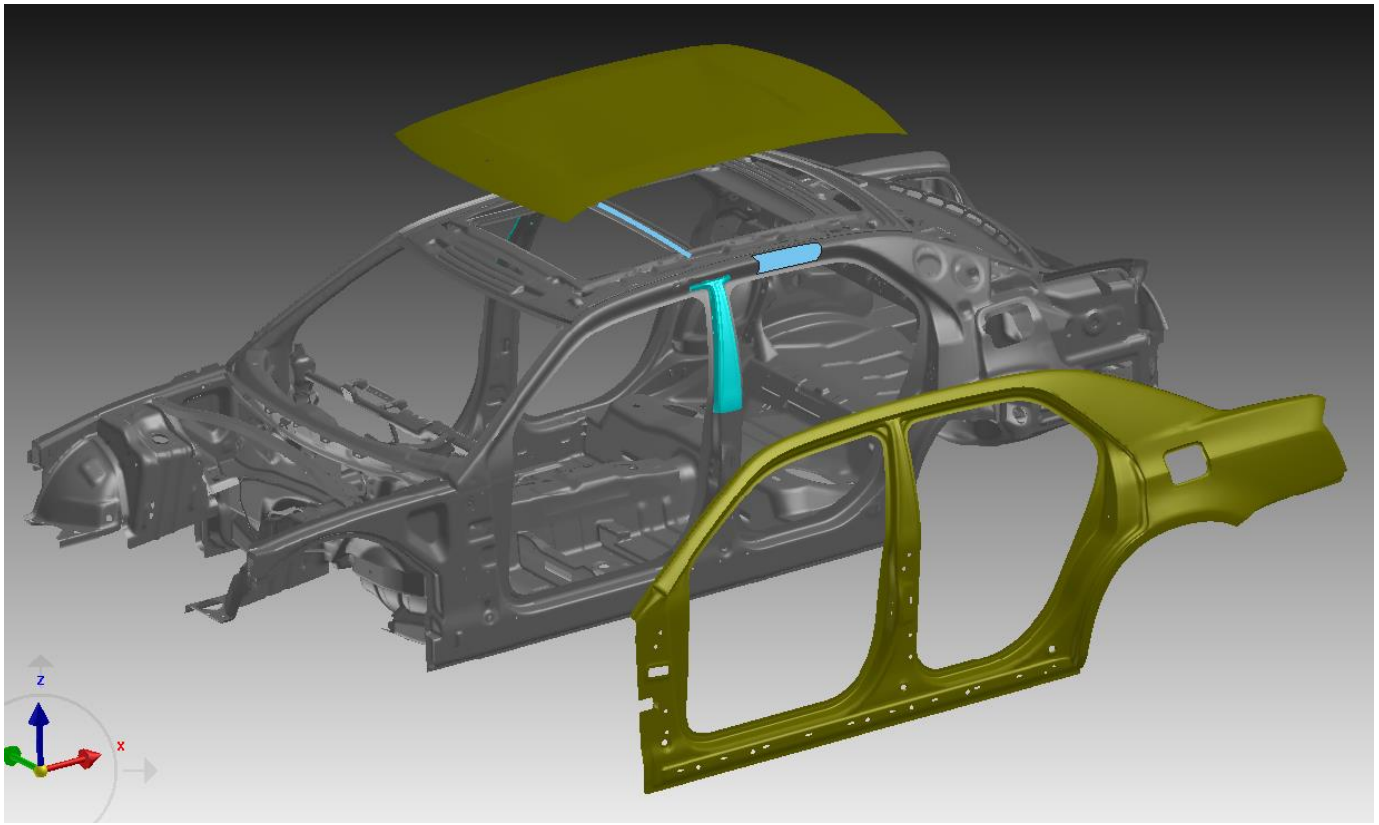

A: Roof panel to roof bow
- Observed read through

B: B-Pillar
- No visible read through

C: C-Pillar
- No visible read through

Prototype Component Tests

All layers are
0.8mm mild steel
EG surface

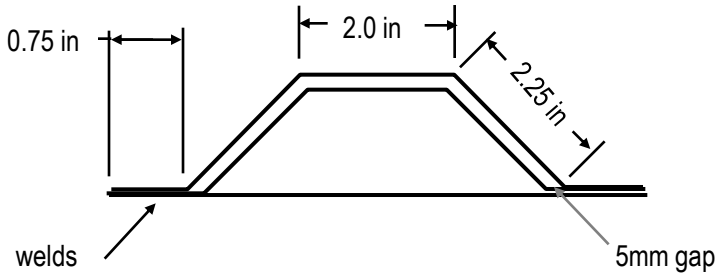

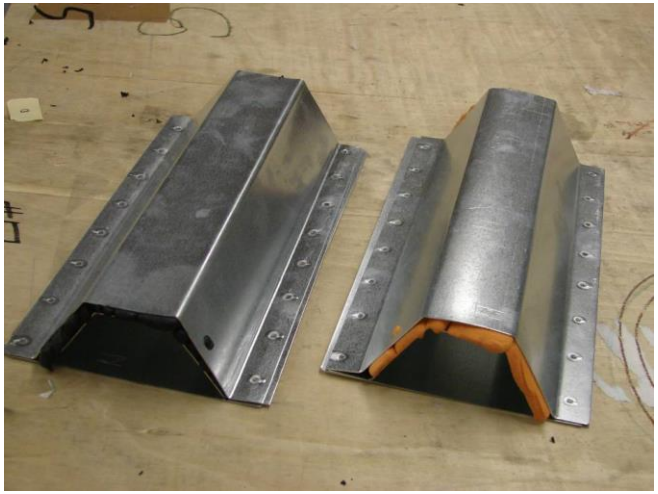

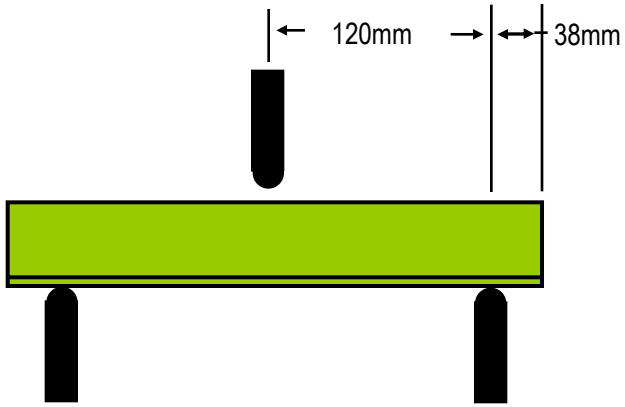

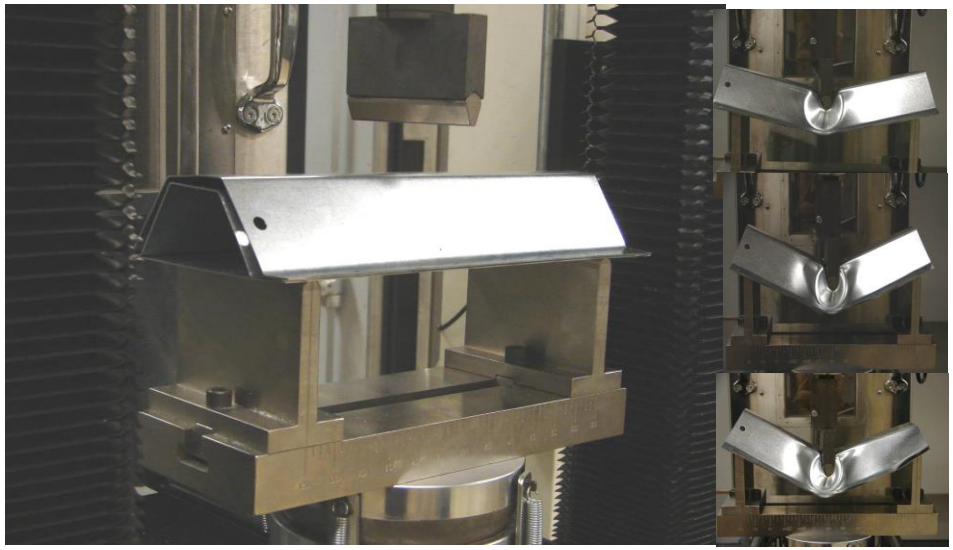

High Speed Component Testing

20 MPH
70 lb mass

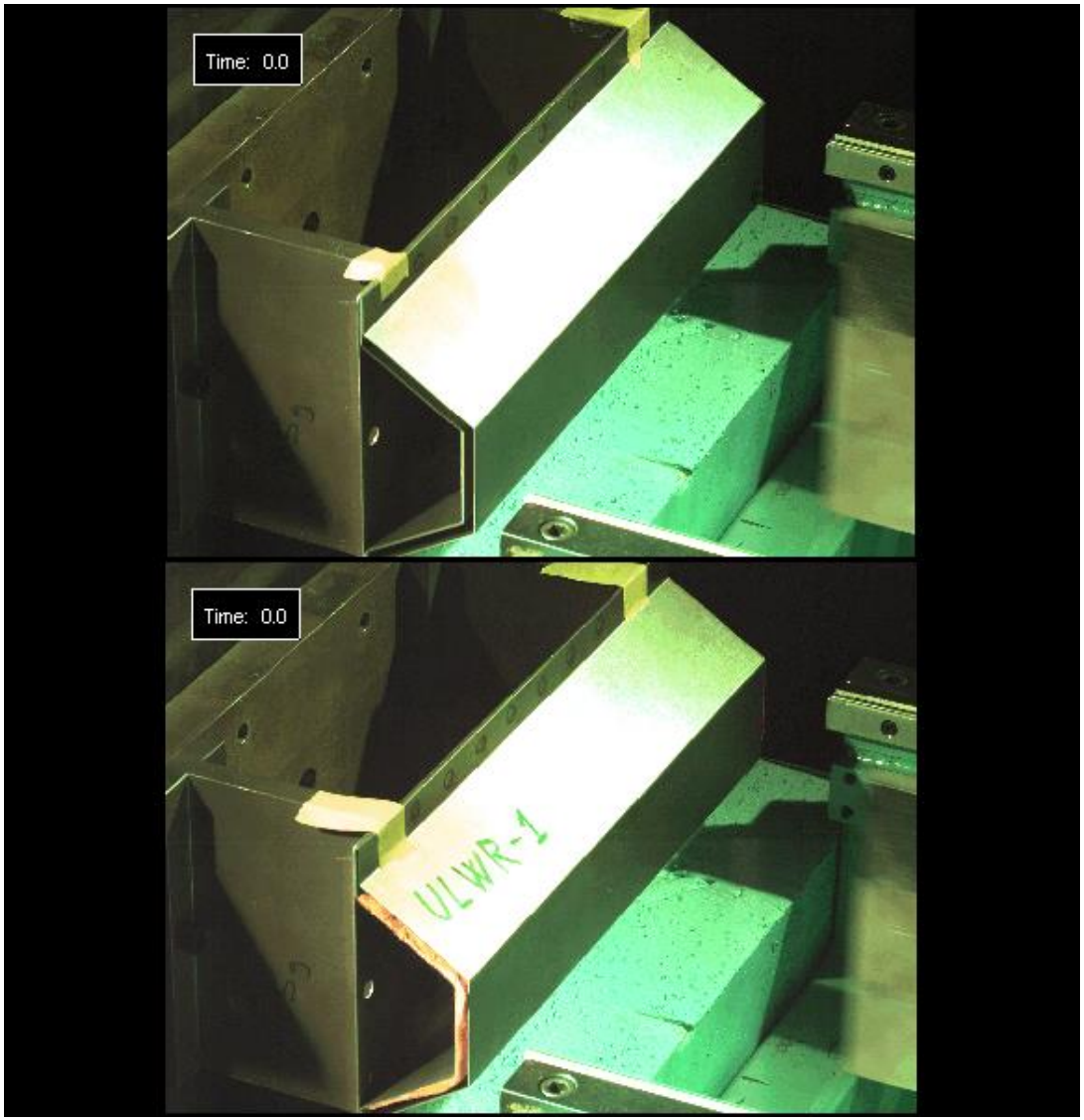

BETAMATE LWR CAE Correlation Component Bending Response

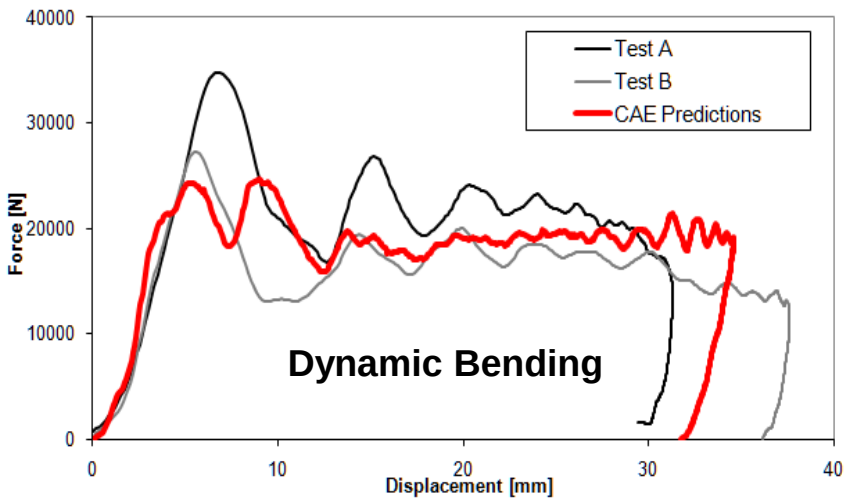

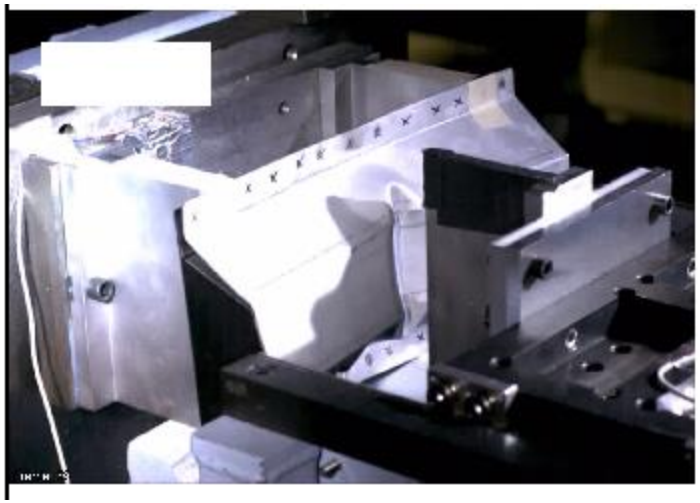

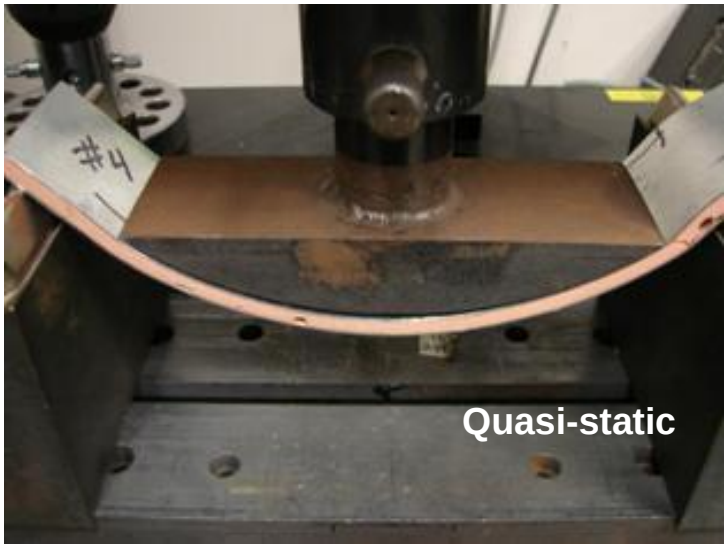

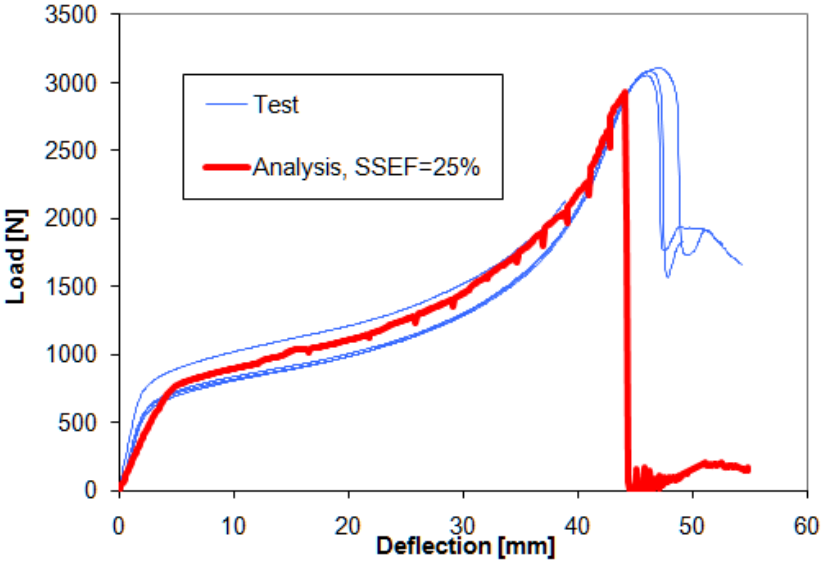

Vehicle Crashworthiness Fit

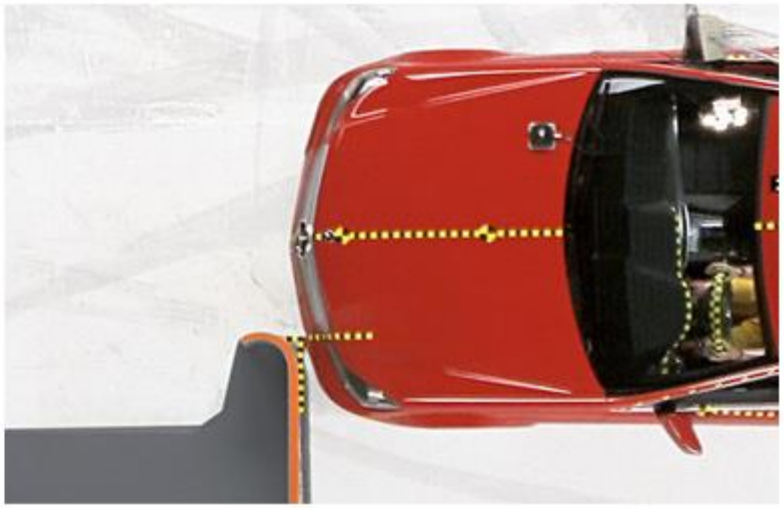

on

NHTSA barrier shown in yellow, superimposed over the taller IIHS barrier

Small overlap frontal test configuration

B-Pillar Side Impact Component Study

Dow Automotive Systems

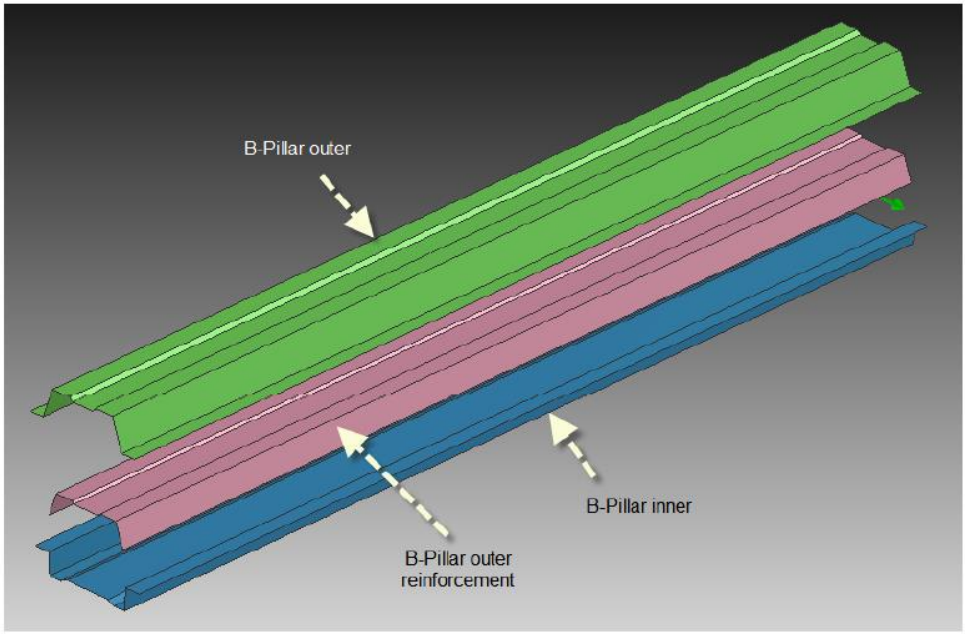

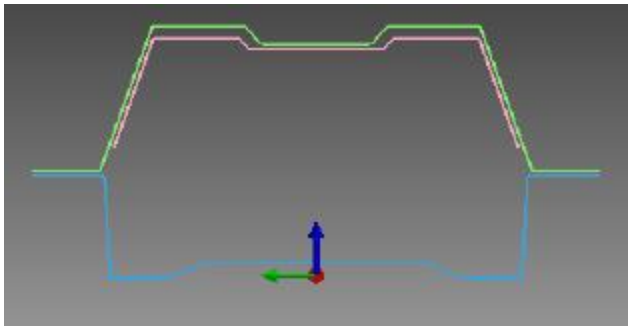

Beam 3 point bending study

B-Pillar inner: DP590
B-Pillar outer/outer reinforcement: DP980

<u>Requirements</u>
Peak load of 50 kN
Peak bending moment of 10.5 kN.m

Assumptions: 1kg of mass savings worth $5 kg

B-Pillar Side Impact Component Study

Dow Automotive Systems

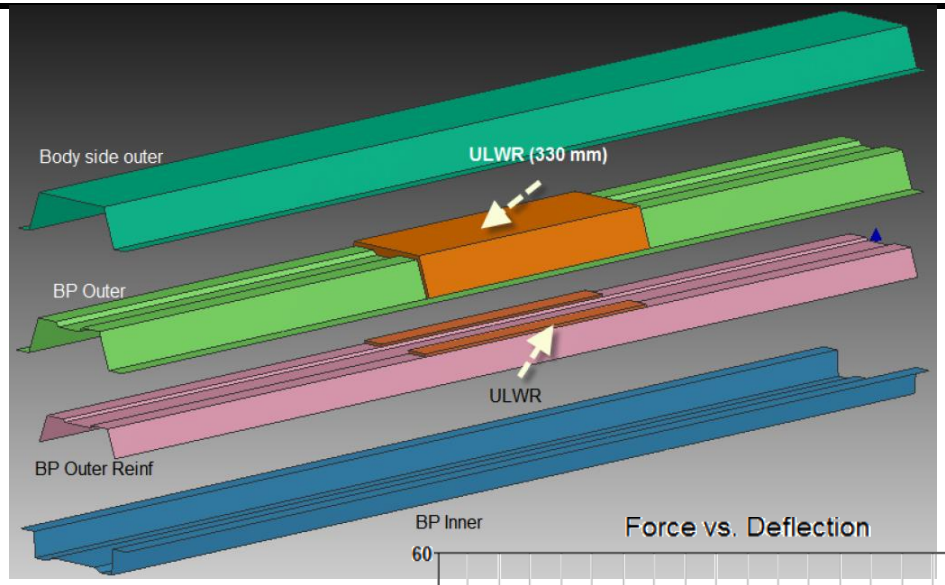

Added LWR mass = 197g
B-Pillar outer 1.2 → 1.0 mm
Reinforcement 1.6 mm → 1.4 mm
Sheet metal saving of 1.0 kg

Cost increase delta on based on material
$2.67

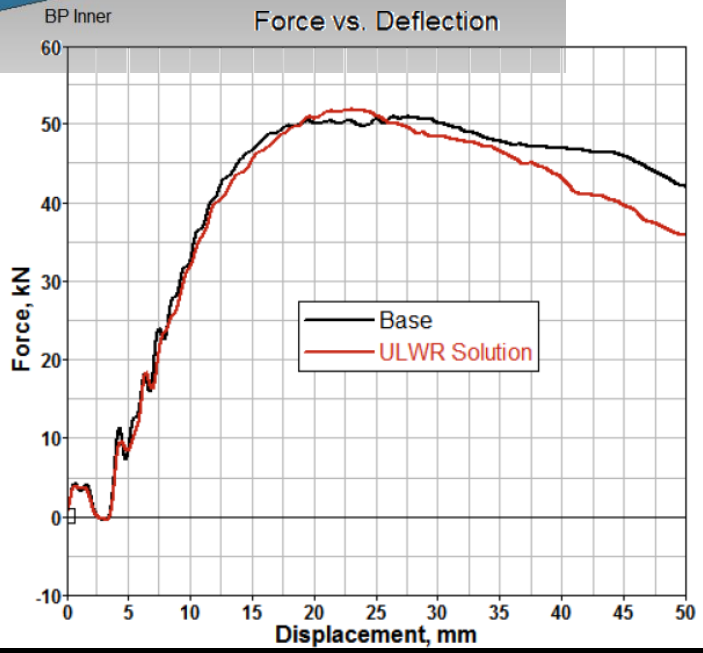

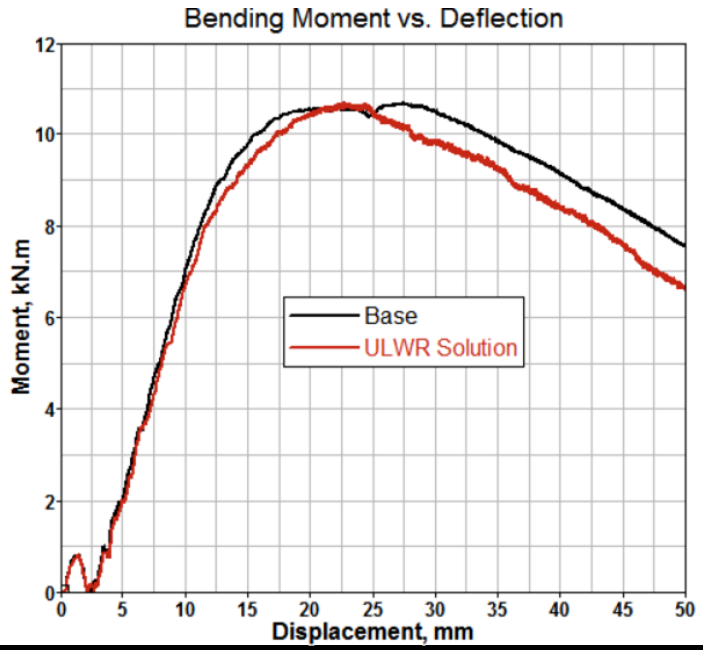

BETAMATE LWR Roof Crush Study

Dow Automotive Systems

SIDE VIEW

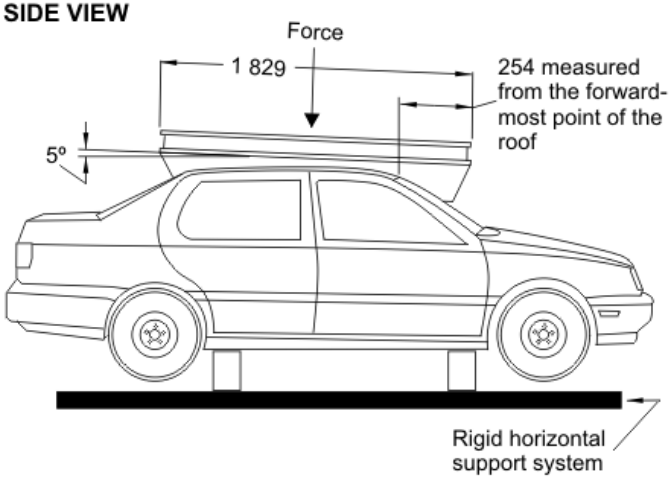

FRONT VIEW

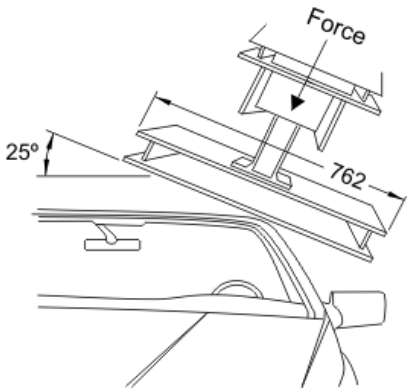

Notes:
1. Dimensions in mm
2. Not to scale

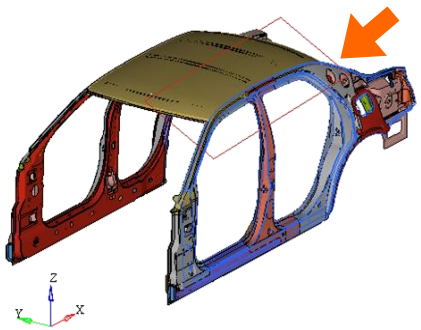

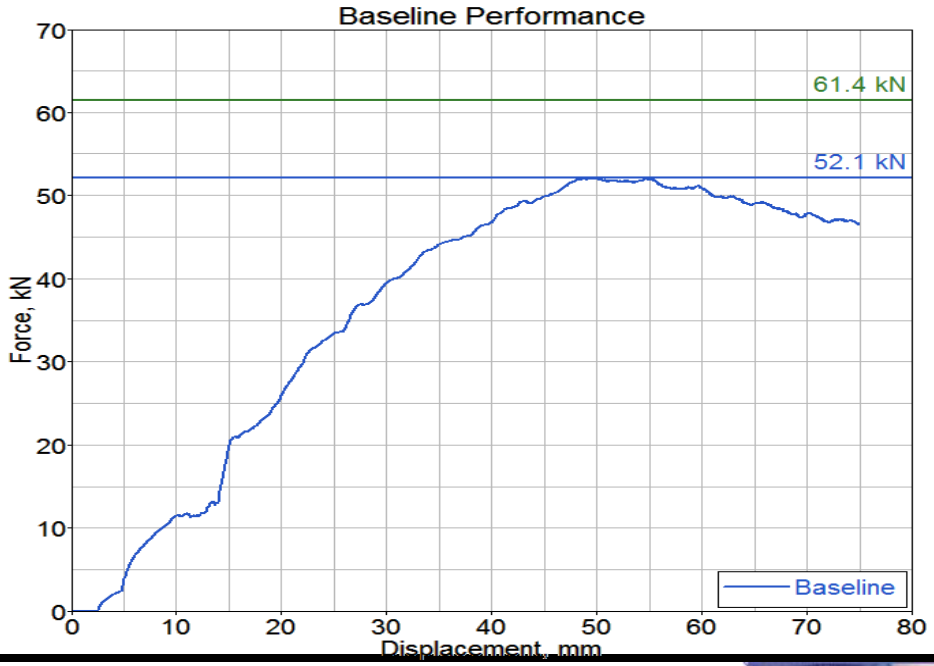

BETAMATE LWR Location Sensitivity Study

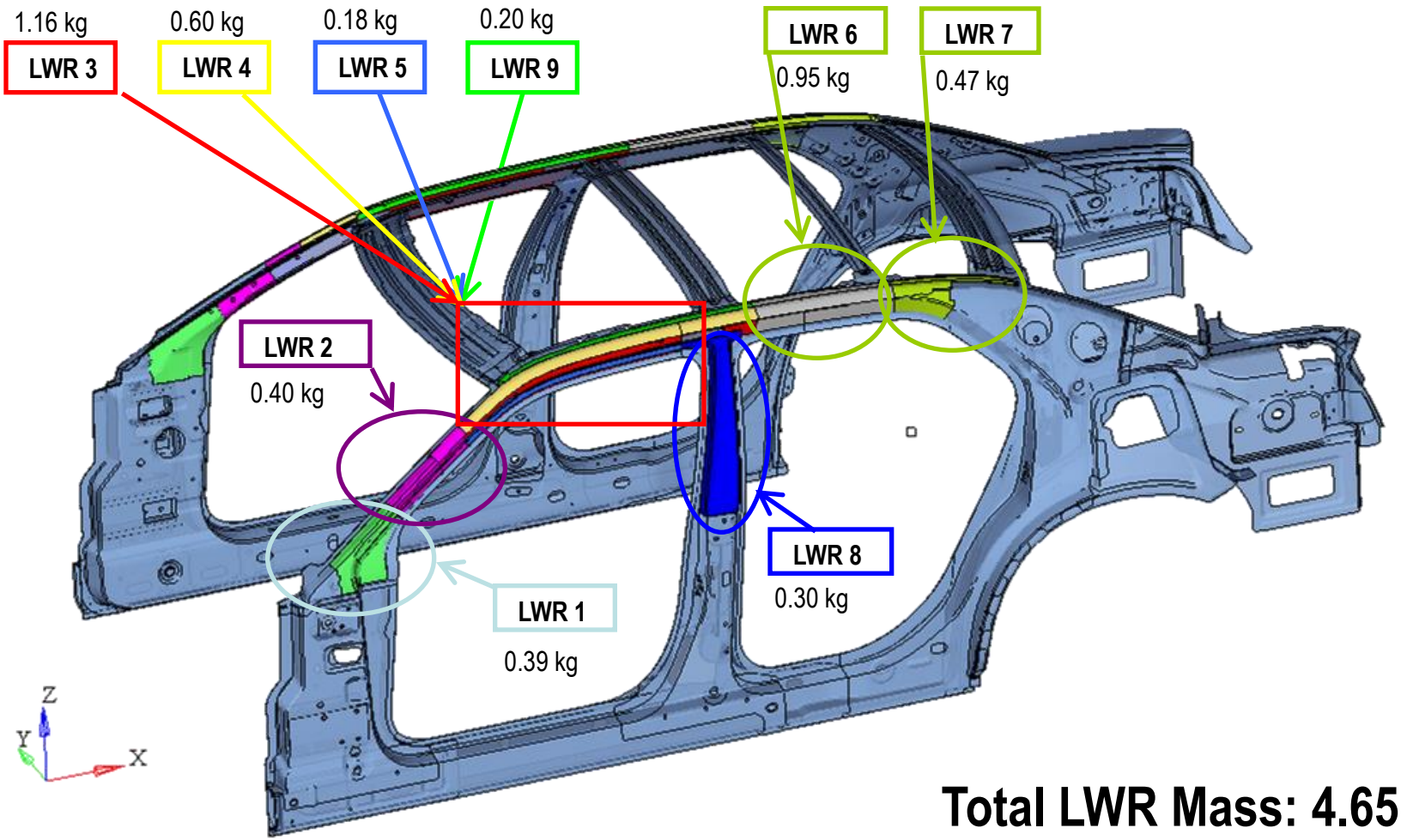

Total LWR Mass: 4.65 kg

BETAMATE LWR Location Sensitivity

Dow Automotive Systems

- The critical locations for LWR
  - LWR 8: B-pillar
  - LWR 1: A-pillar middle joint
  - LWR 7: C-pillar upper joint
  - LWR 3: A pillar upper joint
    - reinforcement (Negative)
  - LWR 6: Roof rail rear gap
- The critical interaction variables
  - LWR 3 * LWR 4
  - LWR 2 * LWR 4 (Negative)
  - LWR 3 * LWR 6 (Negative)

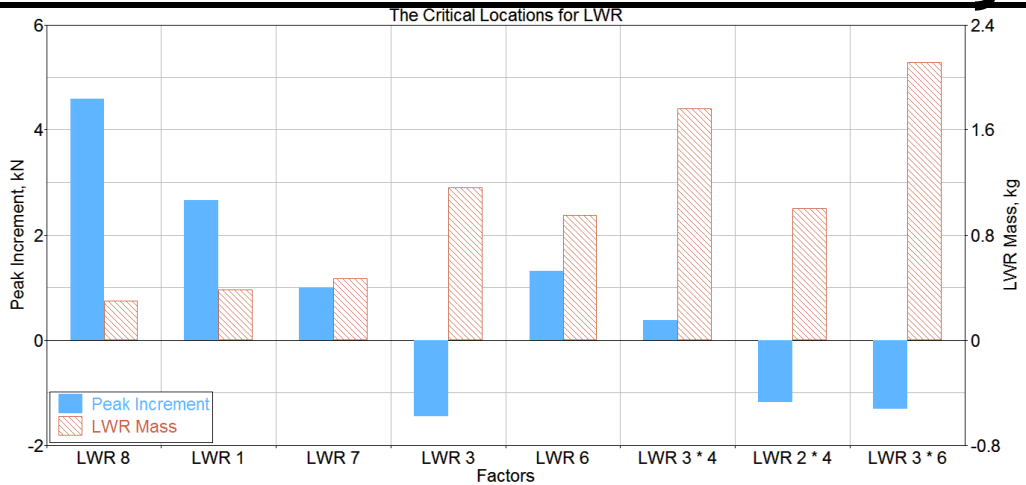

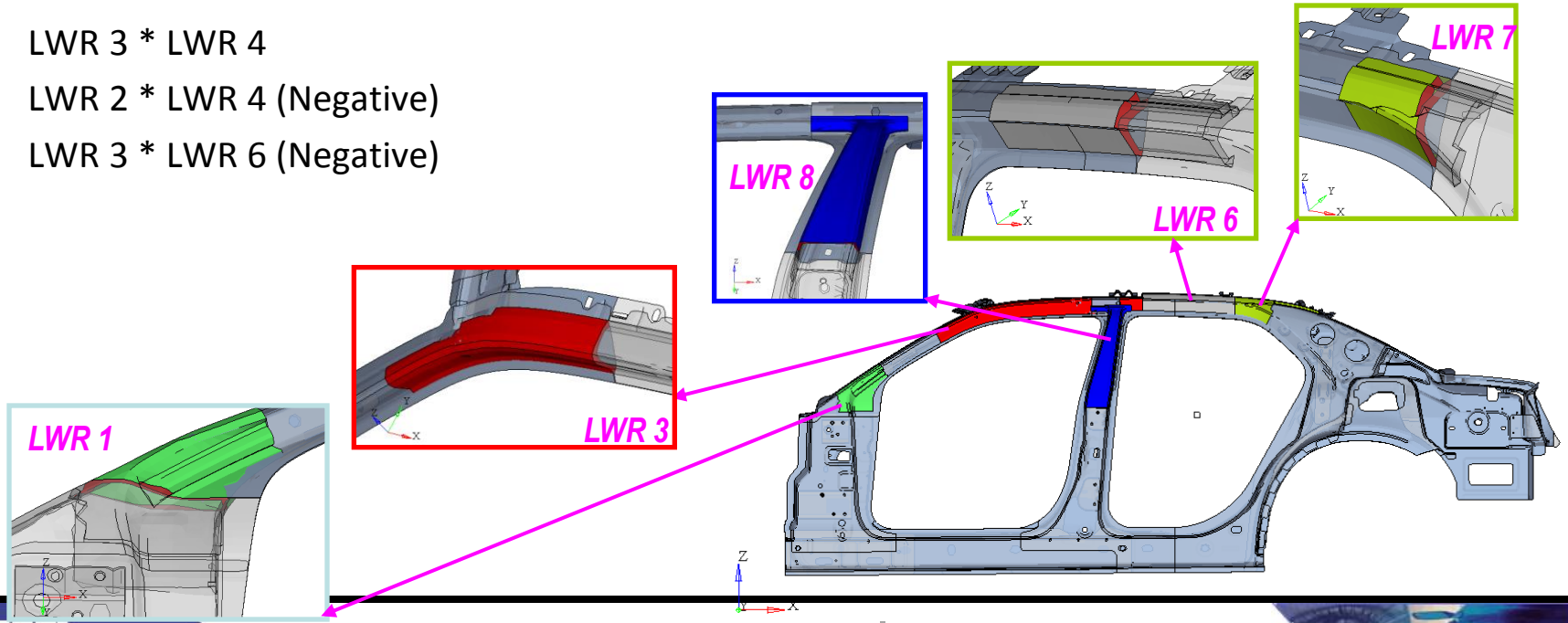

BETAMATE LWR Optimum Locations

- The optimum LWR mass is 1.14 kg
- Peak force is 63.0 kN, increase 21 %

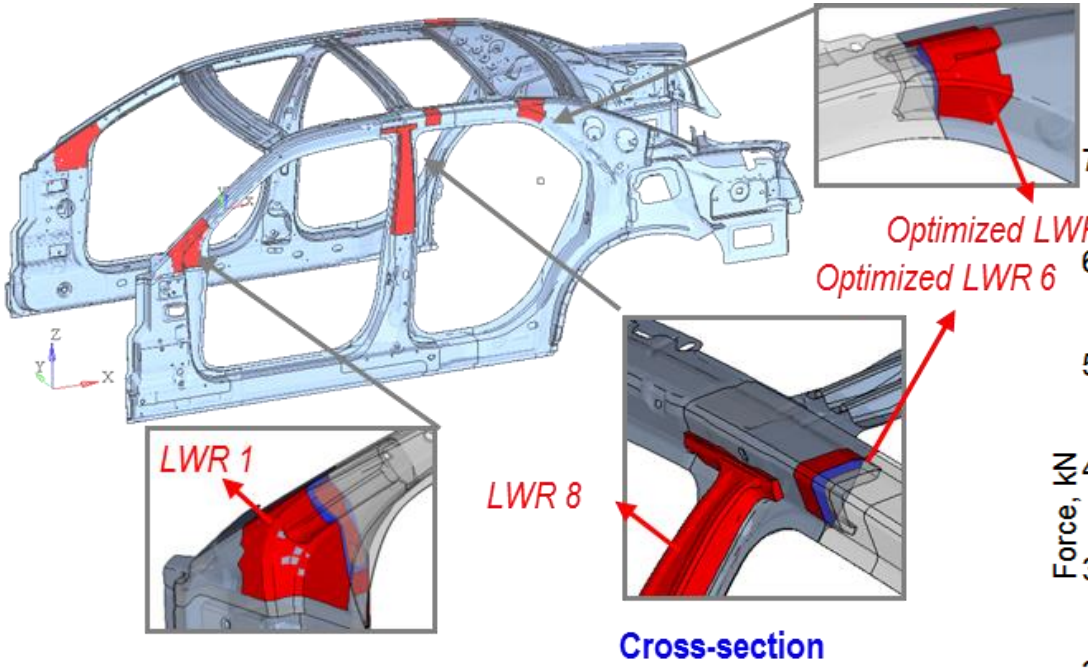

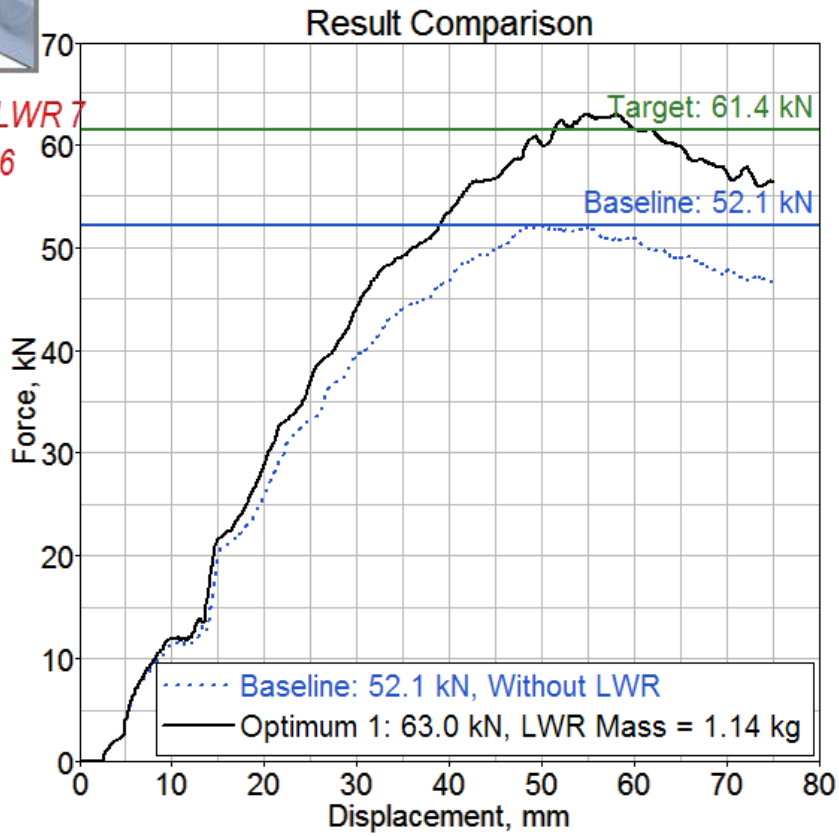

BETAMATE Application to IIHS Narrow Offset

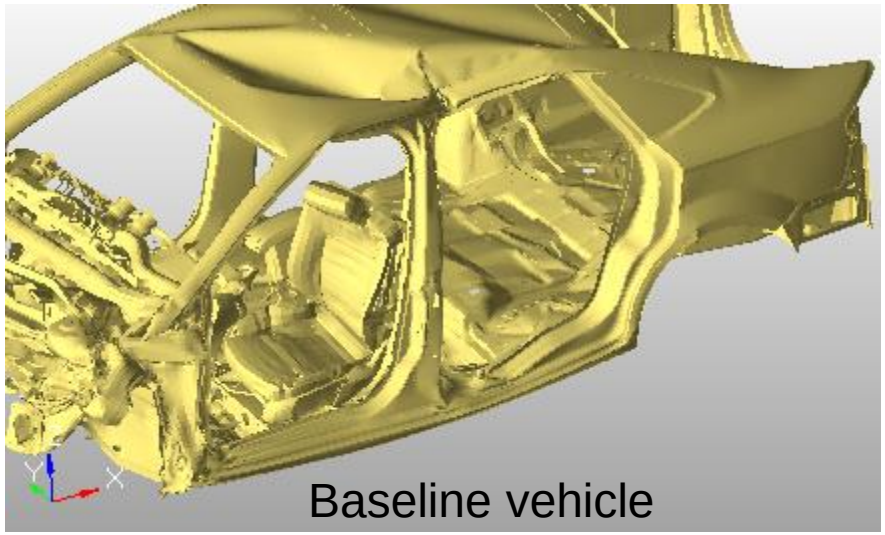

Baseline vehicle response

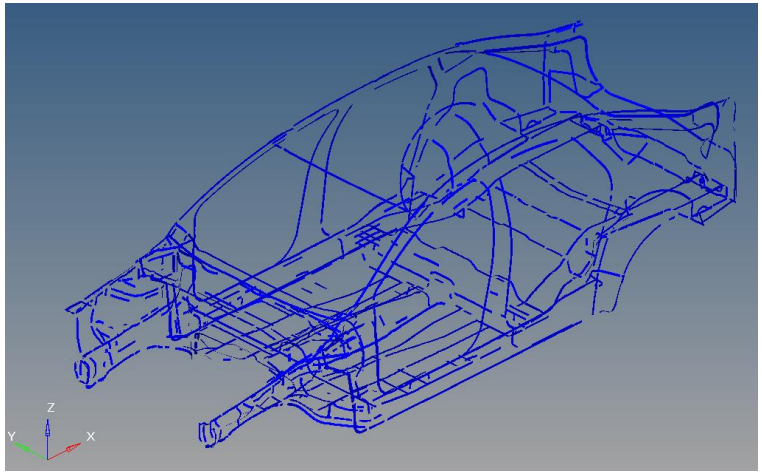

BETAMATE toughened epoxy body flange bonding ~ 100 m

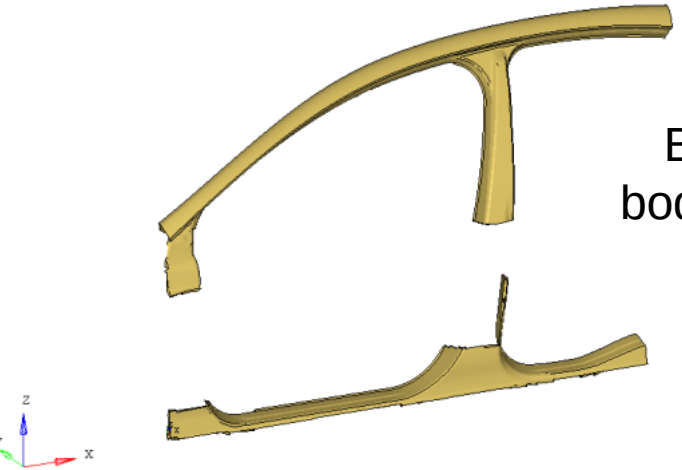

BETAMATE LWR body cavity treatment

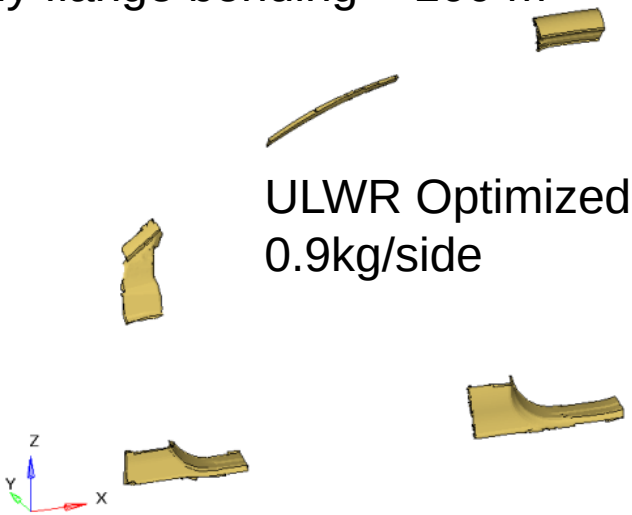

ULWR Optimized #2 0.9kg/side

BETAMATE Application to IIHS Narrow Offset

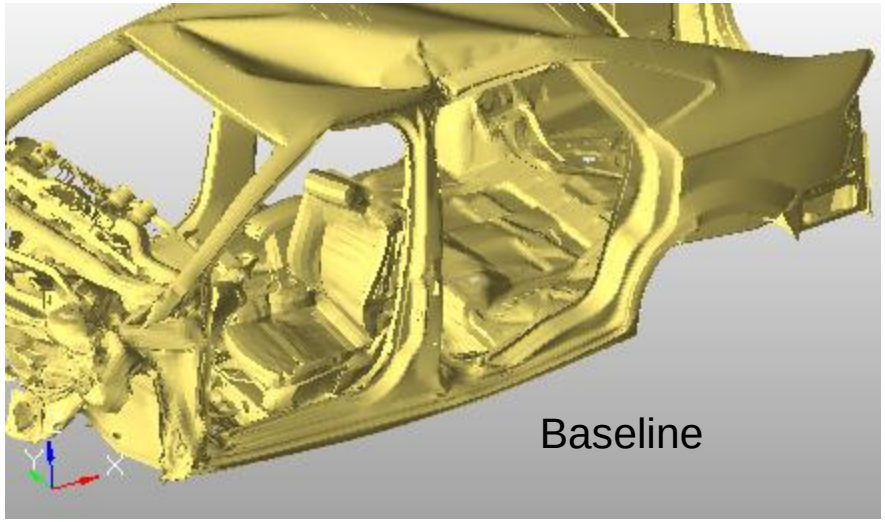

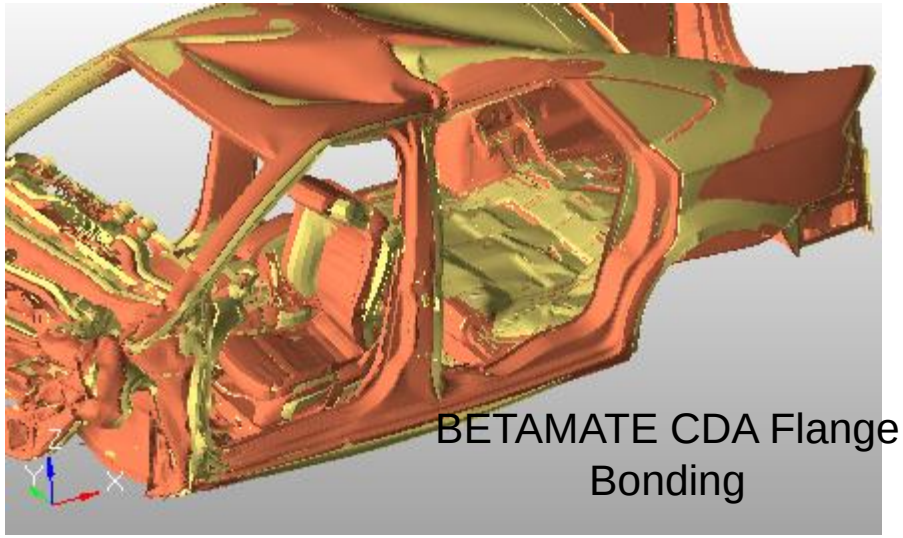

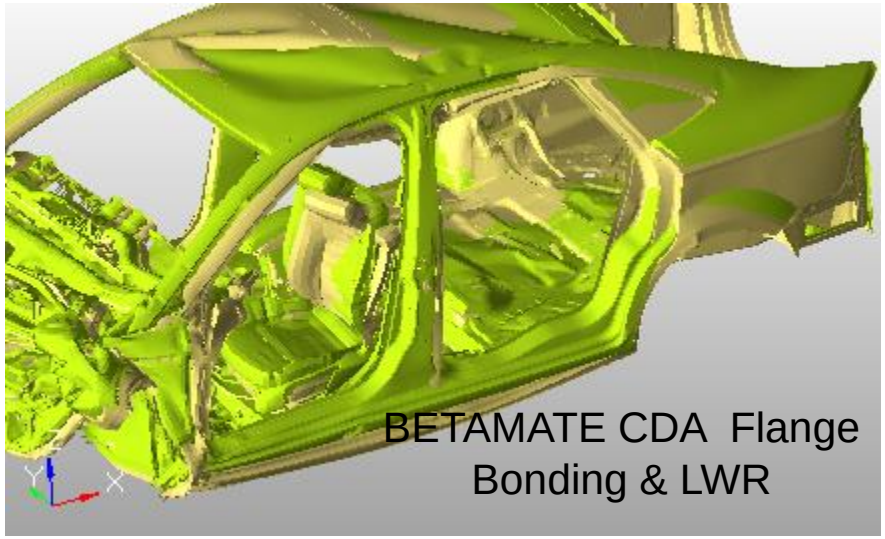

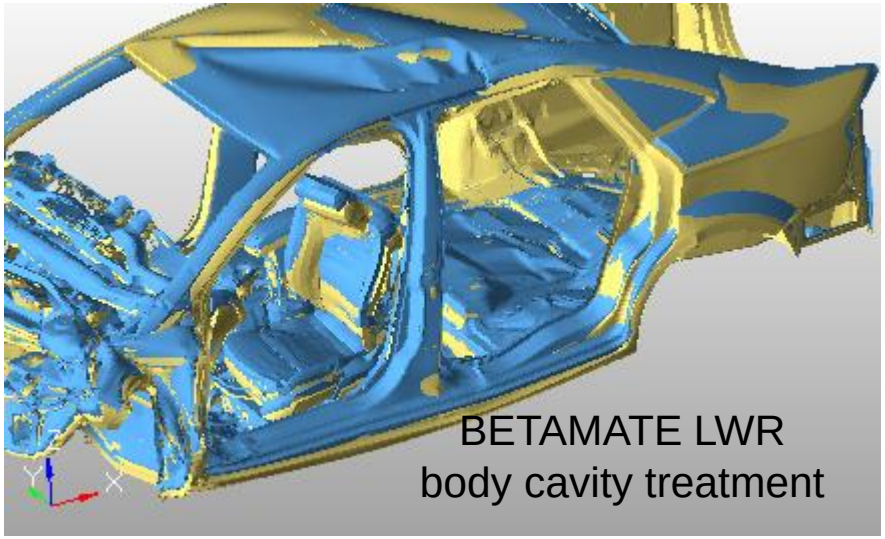

Narrow Offset Intrusion Comparison

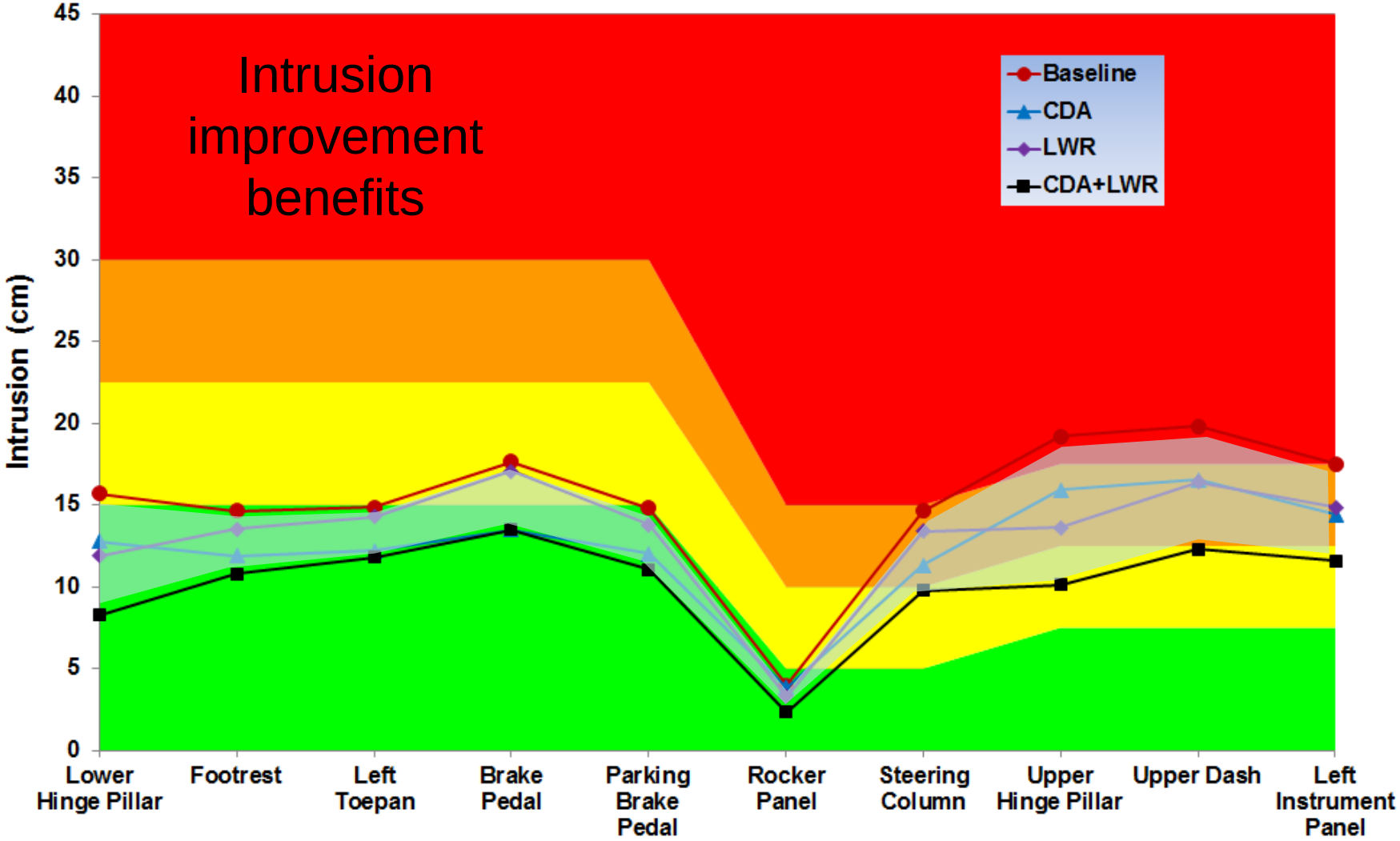

Conclusions

- LWR will enable OEMs and Tiers to reinforce small body cavities with highest performance and lowest mass by using proven crash durable bonding technology
- LWR provides opportunity to
  - Outperform conventional expandable adhesive solutions. Less mass is required in achieving same level of performance
  - Enhance energy absorption and load-transfer between body structure components
  - Join sheet metal components where gaps and joining is not suitable for conventional metal joining or conventional adhesive bonding
  - Optimize body components that are not traditionally considered in design process for meeting new safety and stiffness requirements
- Body shop applied material using the same dispensing equipment used for BETAMATE adhesive bonding
- Vehicle body strength/crashworthiness applications
  - IIHS side impact
  - Roof crush
  - Frontal moderate, and narrow offset impact

Steel
Market Development
Institute

PRESENTATIONS WILL BE AVAILABLE MAY 16

Use your web-enabled device to download the presentations from today's event

Great Designs in Steel is Sponsored by:

AK Steel
ArcelorMittal DOFASCO | HAMILTON
ArcelorMittal
NUCOR
Severstal
U. S. Steel