DuPont™ IntegraTec™ modules

DUPONT™

Manual | Ultrafiltration

DuPont™ IntegraTec™ Module MEV Solution

Process and Design Manual

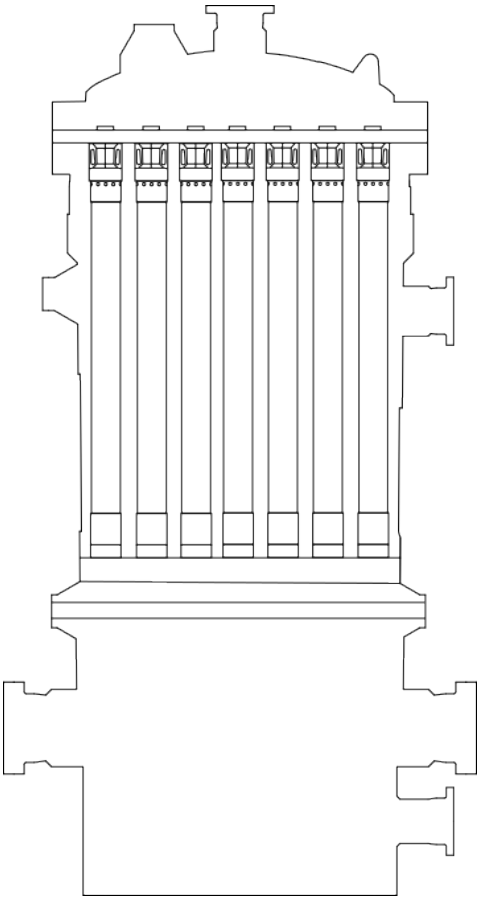

Version 2

January 2026

Water Solutions

NOTICE: Any translations of this document into languages other than English provided to you by DuPont are not official translations and are intended solely as a convenience for non-English reading recipients. The only DuPont-approved and valid version of this document is the most current English version provided by DuPont at the time of sale.

Table of Contents

1 Legal Notice 5
1.1 Product 5
1.2 Change Policy 5
2 About these Instructions 6
2.1 Objective of these Instructions 6
2.2 Target Groups 7
2.3 Symbols in this Process and Design Guidelines 7
2.3.1 Symbols in this Manual 7
2.3.2 Notes on Instructions and Rules 7
2.3.3 Information on Safety and Warning Instructions 7
3 System Description 8
3.1 MEV Technology and Vessel Description 8
3.2 DuPont™ IntegraTec™ Module - MEV Features 11
3.3 DuPont™ IntegraTec™ XP 52 IC Ultrafiltration Module Description 11
3.3.1 DuPont™ IntegraTec™ XP 52 IC Module Filtrate Interconnector 12
3.3.2 DuPont™ IntegraTec™ XP 52 IC Module Bottom Module Adapter 12
3.4 DuPont™ IntegraTec™ XP 52 IC Ultrafiltration Module Features 13
4 MEV Unit Process Description 14
4.1 Process configuration of MEV System 14
4.2 Filtration 15
4.3 Air Scour 16
4.4 Gravity Drain 18
4.5 Backwash (BW) 19
4.5.1 UF Module Backwash 19
4.5.2 Forward Flush 20
4.6 Alternative Operation Modes 22
4.6.1 Elimination of Backwash 22
4.6.2 Backwash with RO Brine 22
5 Water Chemistry and Pretreatment 23
5.1 Water Chemistry 23
5.2 Ultrafiltration Pretreatment 26
6 Chemically Enhanced Backwash (CEB) 28
6.1 Membrane Fouling 28
6.2 Chemically Enhanced Backwash (CEB) 30
6.3 Alternative Cleaning Protocols 32
6.3.1 Mini-CIP 32
7 Clean-In-Place (CIP) 33
7.1 Introduction 33
7.2 Safety Precautions 34
7.3 CIP Requirements 34
7.4 CIP Equipment 35
7.5 CIP Procedure 36
7.6 CIP Tips 39
7.7 CIP Chemicals 40
8 System design 41
9 Operation 43
9.1 Instruments for System Operation 43
9.2 Manual Valve Positioning 43

9.3 Initial Plant Start Up 44
9.3.1 Preliminary Checks 44
9.3.2 Initial Start-Up Sequence 44
9.4 Routine Start Up 45
9.5 Normal Shutdown 46
9.6 Emergency Shutdown 47
9.7 Integrity Test 47
9.7.1 Introduction 47
9.7.2 Physical Inspection of Modules 48
9.7.3 Pressure Decay Direct Integrity Test Procedure 48
9.8 Record Keeping 50
9.9 Data Normalization 52
9.9.1 Introduction 52
9.9.2 Normalization of Performance Data 53
9.9.3 DuPont Ultrafiltration Normalization Tool 54
10 Handling and Storage Guidelines 55
10.1 General 55
10.2 Factory Storage & Shipping of Modules 55
10.3 Storage of New Modules 56
10.4 Short-Term Shutdown & Storage of Used Modules 56
10.4.1 Short-Term Shutdown & Storage, Off-Vessel Storage 56
10.4.2 Short-Term Shutdown & Storage, Off-Vessel Storage 57
10.5 Long-Term Shutdown & Storage of Used Modules 57
10.5.1 Long-Term Shutdown & Storage, Off-Vessel Storage 57
10.5.2 Long-Term Shutdown & Storage, On-Vessel Storage 58
10.6 Freeze-Protection of Used Modules 58
10.7 Re-Wetting of Dried Out Modules 59
11 Troubleshooting 60
12 Fiber repair 62
12.1 Equipment 62
12.2 Leakage hunting and Fiber Repair of DuPont ™ IntegraTec™ XP 52 IC Module 64
12.2.1 Install DuPont ™ IntegraTec™ XP 52 IC module in the AIT Rack 64
12.2.2 Install Seals and Connectors to DuPont ™ IntegraTec™ XP 52 IC Module 65
12.2.3 Fiber Repair and Integrity Test 66
12.2.4 Reinstall Filtrate Cap and unload from AIT Skid 68
13 Addendum 71
13.1 Terminology 71
13.2 Acronyms 74

List of Figures

Figure 1: Reference diagram for the main process connection nozzles (vessel geometry may be different) 8
Figure 2: Vessel internal components diagram 10
Figure 3: MEV vessel Source: courtesy of Fluytec S.A. 11
Figure 4: DuPont™ IntegraTec™ XP 52 IC Module 11
Figure 5: DuPont™ IntegraTec™ XP 52 IC Module reference drawing for dimensions 12
Figure 6: Filtrate interconnector and sealing O-ring 12
Figure 7: Bottom module adapter 12
Figure 8: Wall cross section of the hollow fiber 13
Figure 9: Process diagram with main components 15
Figure 10: Filtration 16
Figure 11: Air scour 17

Figure 12: Gravity drain....18
Figure 13: Backwash, bottom outlet....19
Figure 14: Backwash, top outlet....20
Figure 15: Forward Flush....21
Figure 16: SDI15 filters before and after the test....23
Figure 17: CEB Chart....30
Figure 18: CEB chemical injection, bottom outlet....31
Figure 19: CEB chemical injection, top outlet....31
Figure 20: Recommended CIP setup....35
Figure 21: CIP with concentrate recirculation....38
Figure 22: CIP with concentrate and permeate recirculation....38
Figure 23: Pressure decay test diagram....49
Figure 24: TCF vs Temperature (°C)....53
Figure 25: Materials and Tools of IC-50 fiber repair....62
Figure 26: Air Supply Apparatus....63
Figure 27: Air Supply Apparatus installed on the test rack....64
Figure 28: Install Modules to the Rack....65
Figure 29: Disassemble filtrate cap and assemble feed cap....65
Figure 30: Fill Module with clean water....66
Figure 31: Assemble the brine seals and clamp....66
Figure 32: Install air tube to the feed port....66
Figure 33: Locate leaking fibers and plug with pins....67
Figure 34: Apply instant adhesive to repair pins....68
Figure 35: Repair leaking point with glued pins....68
Figure 36: Measure Pressure decay for 5mins....68
Figure 37: Inspect O-ring intactness....69
Figure 38: Apply lubricant to the inner surface of filtrate cap....69
Figure 39: Assemble filtrate cap....70
Figure 40: end cap after....70

List of Tables

Table 1: DuPont™ IntegraTec™ XP 52 IC Module dimensions, connections, and specifications....11
Table 2: MEV unit operating conditions....14
Table 3: Recommended Water Quality Sampling Program....24
Table 4: Qualified Feed Water Quality Parameters....25
Table 5: Strainer selection guidelines....26
Table 6: Summary of the fouling types and methods of control....29
Table 7: pH and temperature limits during cleaning....34
Table 8: Recommended CIP Feed Flowrate per UF module....36
Table 9: General Valve Sequence Table for CIP Procedure....36
Table 10: General CIP Cleaning Solutions....40
Table 11: Minimum instruments recommended in an Ultrafiltration system....43
Table 12: Valve position during normal operations....43
Table 13: Example of DuPont UF Operation Log Sheet....51
Table 14: Example of DuPont UF CIP Log Sheet....52
Table 15: Temperature vs TCF....53
Table 16: Summary of the target glycerin strengths....58
Table 17: DuPont UF System Troubleshooting Guide....60
Table 18: List of Materials and tools Supplied by DuPont....63

1 Legal Notice

1.1 Product

This manual applies to DuPont™ IntegraTec™ Modules for MEV Solutions, parts and components for design and operation.

Duplication and archiving in any form whatsoever – including of excerpts – is only permitted with the written consent of the manufacturer.

All brand and company names in these process and design guidelines are registered trademarks of the corresponding companies.

1.2 Change Policy

The manufacturer reserves the right to change this process and design guidelines or any part thereof at any time in the interest of continuous product improvement.

The company/party responsible for process and design of the system described in this manual should obtain the current DuPont™ IntegraTec™ Modules for MEV Solution Process & Design Guidelines at regular intervals:

- Download at: https://www.dupont.com/brands/integratec-ultrafiltration.html

2 About these Instructions

NOTE	
	READ THE INSTRUCTIONS! Read this document to plan your system. The process and design guidelines described in this document are only to be viewed as recommendations for your system. The system integrator and the operator are responsible for compliance with applicable legal and local regulations for environment, health and safety (EHS).

2.1 Objective of these Instructions

This document contains a detailed description of all process and design guidelines of the DuPont™ IntegraTec™ Modules for MEV Solution.

This document contains instructions and rules for the correct and safe operation of the system.

Warranty Policy

NOTE	
	ADHERENCE TO ALL INSTRUCTIONS! Full and proper compliance with the instructions in these process and design guidelines is a prerequisite for making a claim under the warranty. Any translations of this document into languages other than English provided to you by DuPont are not official translations and are intended solely as a convenience for non-English reading recipients. The only DuPont-approved and valid version of this document is the most current English version provided by DuPont at the time of sale. In the event of making a warranty claim, the customer agrees to automatically provide DuPont with a complete set of documentation. Please contact DuPont if you wish to deviate from any of the guidelines or specifications provided in this document and request written approval in advance. Otherwise, you risk invalidating any warranty claims that you may make in the future.

2.2 Target Groups

Qualified Persons

- Project and planning engineers/technicians.
- Programmers
- Commissioning engineers/technicians
- Design engineers

2.3 Symbols in this Process and Design Guidelines

2.3.1 Symbols in this Manual

The following symbols are used in this manual:

SYMBOL	*DESCRIPTION (EXAMPLES)*
	IMPORTANT NOTE! Failure to follow the instructions in this note may lead to problems with the product.
	INFORMATION! Following this information will make it easier to assemble the DuPont™ IntegraTec™ modules for MEV solution.
	CROSS REFERENCE! Detailed information on this topic can be found in other documentation.

2.3.2 Notes on Instructions and Rules

To ensure correct, safe and fault-free operation of the system, the document highlights instructions and rules in the following manner:

NOTE	
	ATTENTION! Observe the following guidelines!

2.3.3 Information on Safety and Warning Instructions

CAUTION	
	DANGER OF INJURY! Personal injury due to a potentially hazardous situation. If this situation is not avoided, it may lead to minor or moderate injury. • Actions to avert danger.

3 System Description

3.1 MEV Technology and Vessel Description

The MEV unit consists of ultrafiltration modules submerged inside a pressurized vessel. The design of the pressure vessel is customizable and the dimensions, features and nozzle placement can be different depending on the final product specifications.

To keep the consistency along this manual, the main nozzles related to the Ultrafiltration process, will be named using letters (from A to E) as indicated in the reference diagram below. The exact nozzle placement can be found in the respective pressure vessel manual.

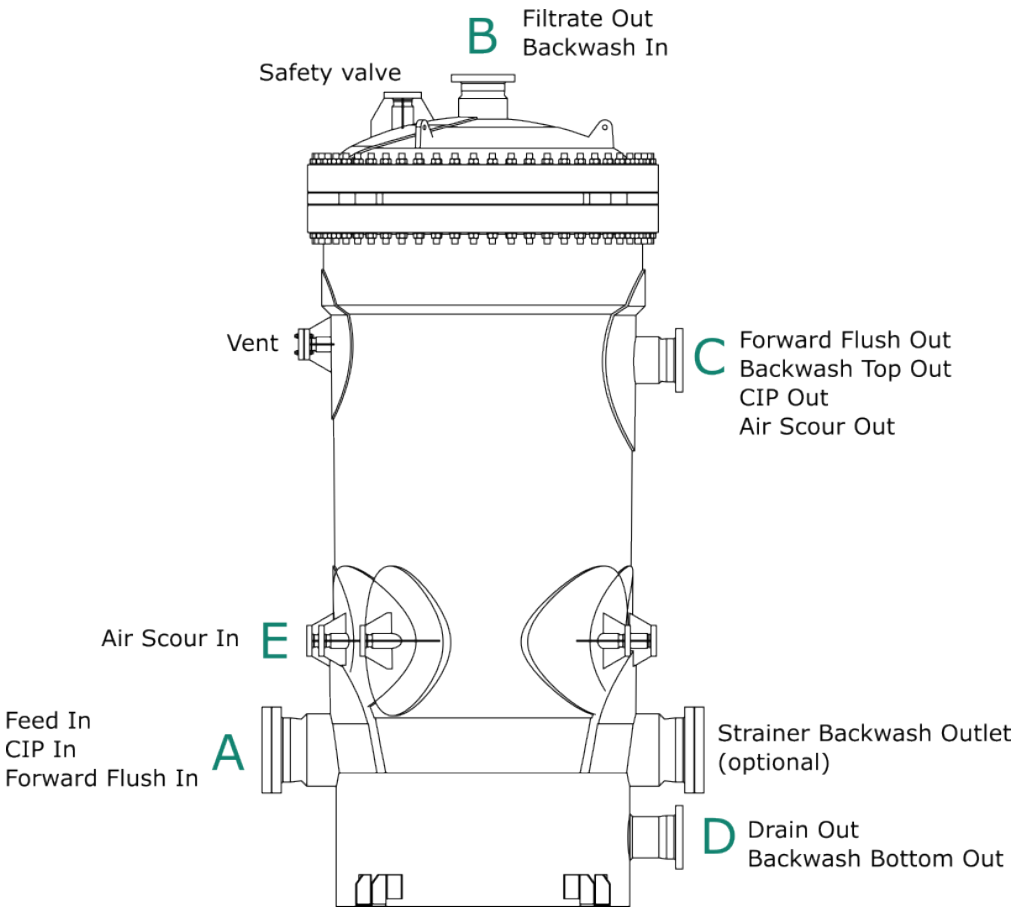

Figure 1: Reference diagram for the main process connection nozzles (vessel geometry may be different)

The pressure vessel is divided in three different internal functional zones:

- ZONE 1, or the bottom chamber. Receives the raw feed water, can optionally be equipped with a self-cleaning strainer.
- ZONE 2, or the intermediate water chamber, where the Ultrafiltration membranes and the air distribution system are installed.
- ZONE 3, or the top chamber, where treated water (filtrate) is collected.

The water flow distribution that takes place within the MEV unit and through the mentioned zones is as follows:

ZONE 1, at the bottom takes in the raw water to be treated.

This zone can have up to three (3) connections to the process. **Nozzle A** links the raw water intake to the intake manifold. If the vessel is equipped with an internal self-cleaning strainer (optional), there will also be a nozzle for the strainer cleaning drainage. **Nozzle D** is the outlet of the bottom backwash water and drain from the UF Modules.

ZONE 2 (see Figure 3: MEV vessel Figure 2) accounts for most of the volume of the pressure vessel. Multiple membrane modules are attached at their tops to the top attachment plate at the support that rests on the cylindrical inner surface of the pressure vessel.

The ultrafiltration modules are outside-in type, so that solids are retained in the outer part of the membrane fibers and water flows through the fibers wall and the filtrate is collected in the inside lumen of each fiber and through the top attachment plate into the top chamber (zone 3). The connection between each ultrafiltration Module and the top attachment plate is sealed to prevent any cross contamination between the feed and product water.

Zone 2 contains **Nozzle E**, through which air can be introduced into the chamber to improve washing performance by moving the fibers and loosening the cake of solids formed on their outside surfaces. Inside the vessel there is header which distributes the air evenly amongst the different UF Modules. Depending on the vessel design, there can be multiple **Nozzle E** connections to the exterior.

Zone 2 also contains **Nozzle C** at the upper part of the chamber through which top backwash flow and forward flush are removed from the vessel.

There is no physical isolation between Zone 1 and Zone 2, water can flow from one chamber to the other. The internal pressure during operation is the same.

ZONE 3: The outfeed water (UF filtrated water) that flows through the interior of each UF Module is collected in this top chamber. From there it exits the MEV unit via **Nozzle B**.

With the UF modules installed, **Zone 3** becomes hydraulically isolated from **Zone 2** and **Zone 1**, therefore, it can be subject to different water pressures. This must be taken into consideration during the design of the piping and safety devices like pressure release valves, air release and vacuum protection devices.

It is recommended that the outlet (UF filtrate) pipe includes a flange with a transparent viewing port designed and located for easy visual integrity inspection. The transparent pipe will make it easy to identify vessels having integrity issues during the direct integrity test. Pressurized air is used to check for leaks, which are revealed by air bubbles coming out of the filtrate side of the vessels.

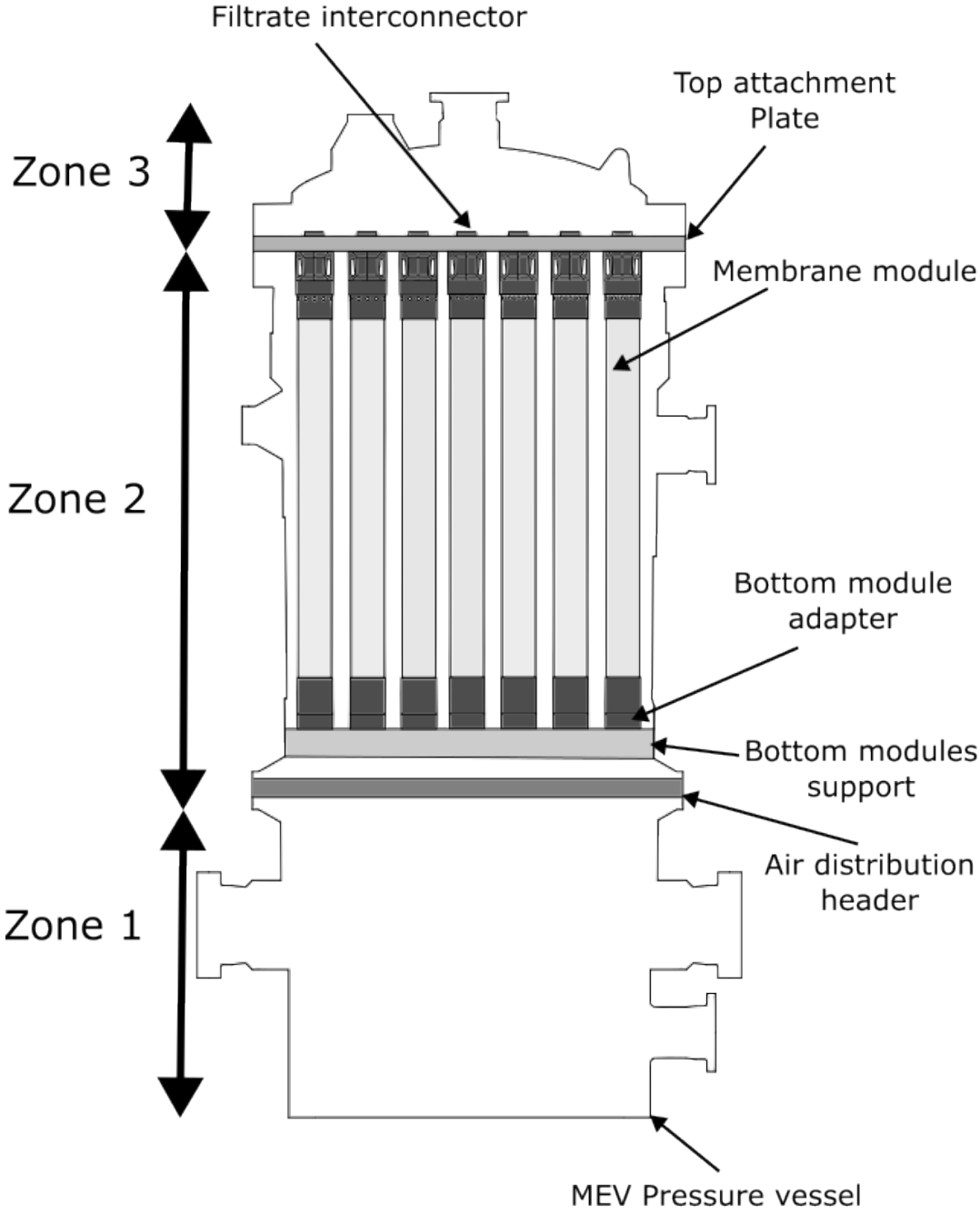

Figure 2: Vessel internal components diagram

3.2 DuPont™ IntegraTec™ Module - MEV Features

Figure 3: MEV vessel
Source: courtesy of Fluytec S.A.

The standard MEV vessel design is made of Glass Reinforced Plastic (GRP) with UV protection for external installation. GRP has proven to have a perfect corrosion resistance behavior. The vessel internals and membrane module design can also be adapted to other membrane materials, configurations, or size at any time. Other construction materials are available upon request (Stainless Steel & Carbon Steel Rubber Lined). This enables the EPC and End Users to take advantage of the following main benefits

- Compact system design: reduced footprint, no interconnecting pipework for Modules.
- High pressure tolerance, which allows direct coupling UF+RO and eliminate need of intermediate break tank, RO booster pumps or Module filters.
- Outdoor installation, helping to reduce civil construction costs and project time execution.
- Multiple sizes with a variety of diameters, pressure ratings, materials (GRP, CS, SS) and design codes and certifications.

3.3 DuPont™ IntegraTec™ XP 52 IC Ultrafiltration Module Description

This section includes the description of DuPont™ IntegraTec™ XP 52 IC Ultrafiltration Module.

Figure 4: DuPont™ IntegraTec™ XP 52 IC Module

Table 1 shows dimensions and specifications for the DuPont™ IntegraTec™ IC-52 XP ultrafiltration Modules, as depicted in Figure 4: DuPont™ IntegraTec™ XP 52 IC Module. Note that manufacturing and thermal expansion tolerances are not included in the dimensions below.

For detailed information, see DuPont™ IntegraTec™ XP 52-IC MEV Module Product Data Sheet (Form No. 45-D03629-en)

Table 1: DuPont™ IntegraTec™ XP 52 IC Module dimensions, connections, and specifications

Product Name	**DuPont™ IntegraTec™ XP 52 IC Module**	
Units	SI	US
Active area	52 m^2	560 ft^2
Fibers length	2,119 mm	83.4 in
Module Length (L1)	2,119 mm	83.4 in
Module Length Overall (L2)	2,265 mm	89.2 in
Module Diameter (D1)	178 mm	7.0 in
Module Diameter (D2)	160 mm	6.3 in
Module Diameter (D3)	170 mm	6.7 in
Module Diameter (D4)	80 mm	3.1 in
Empty / Shipping / Flooded weight	26/30/52 kg	57/66/115
Volume per Module	26 L	6.9 gal
Housing	PVC	
Configuration	Outside/In hollow fiber	

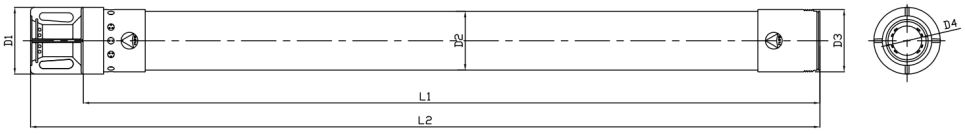

Figure 5: DuPont™ IntegraTec™ XP 52 IC Module reference drawing for dimensions

3.3.1 DuPont™ IntegraTec™ XP 52 IC Module Filtrate Interconnector

Filtrate interconnector is used to connect and seal the module filtrate port to the vessel top attachment plate. This part ensures physical insolation between Zone 2 and Zone 3 of the MEV vessel. Each interconnector includes 4 elastomeric O-rings.

Figure 6: Filtrate interconnector and sealing O-ring

3.3.2 DuPont™ IntegraTec™ XP 52 IC Module Bottom Module Adapter

Generation 2 vessel designs make use of a specific adapter to fix the module to the supporting structure at the bottom of the vessel. This device also plays an important role optimizing the water and air distribution.

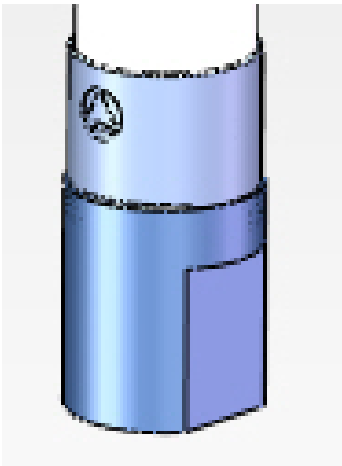

Figure 7: Bottom module adapter

3.4 DuPont™ IntegraTec™ XP 52 IC Ultrafiltration Module Features

The DuPont™ IntegraTec™ XP 52 IC Ultrafiltration Modules are made of high strength, hollow fiber membranes with features and benefits including:

- 52 m² of filtration area to enable substantial reduction of capital costs, weight, and footprint of large water treatment systems
- 0.03 µm nominal pore diameter which enables removal of bacteria, viruses, and particulate materials
- Polyvinylidene Difluoride (PVDF) fibers free of macro voids for high mechanical strength with excellent chemical resistance offering long membrane life and reliable operation.
- Hydrophilic PVDF fibers for easy cleaning and wettability that help maintain long term performance.
- Outside-In flow configuration which allows for high solids feed water, while maintaining reliable system performance and producing high quality filtrate.
- Streamlined integrated PVC housing that eliminates non value added parts to make room for more fibers, while reducing fiber packing density at Module extremities and improving removal of suspended solids to limit Module fouling.
- Compatible with Air Scour, a cleaning operation that increases the cleaning efficiency and saves water.
- Potting design eliminates gaskets between filtrate and concentrate compartments reducing maintenance requirements and streamlines fiber repair in the unlikely event of fiber breakage.
- Low weight (26kg) allows element load/unload without special tools

The outside-in flow configuration allows the use of highly effective air scour cleaning which enhances particle removal and improves recovery. A dead-end flow format achieves higher recovery and energy savings. The vertical orientation allows gravity draining and facilitates the removal of air from cleaning and integrity testing processes.

The hollow fiber membranes are 1.3 mm outside diameter and 0.7 mm inside diameter and are made from PVDF polymer. The fibers are strong because of a combination of the PVDF polymer, dense substructure and selective active layer formed on the feed side of the fiber. The PVDF membranes offer high chemical resistance, coping with NaOCl concentrations up to 2000 mg/L, and are tolerant to temperatures of 40°C. The hydrophilicity of the PVDF fibers is increased by using a proprietary treatment during manufacturing.

The 0.03 µm nominal pore size combines high filtration performance and high flux. The smaller pore size provides stabile long-term filtration performance compared to microfiltration membranes.

A cross section of the standard fiber is shown in **Error! Reference source not found.**.

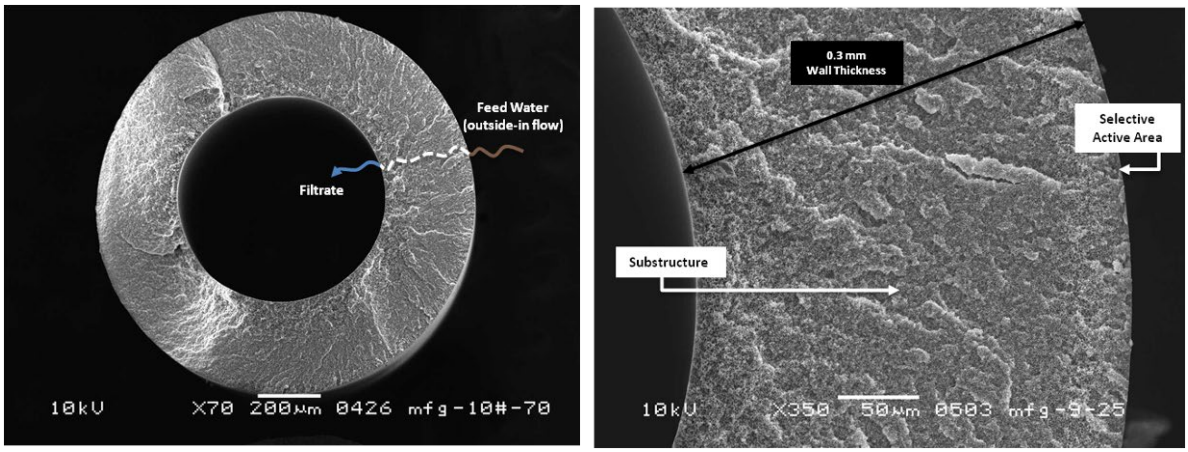

Figure 8: Wall cross section of the hollow fiber

4 MEV Unit Process Description

The basic operating conditions for MEV units are shown in **Error! Reference source not found.** below. Operating parameters for the cleaning steps are provided in Chapter **Error! Reference source not found.**

Table 2: MEV unit operating conditions

Operating Conditions	SI	US
Max. Feed Pressure	According to the vessel design, standard products can go up to 16 bar.	
Operating TMP (maximum)	2.1 bar	30.50 psi
Strainer differential pressure (maximum)	2.0 bar	29.00 psi
Backwash TMP (maximum)	2.5 bar	36.25 psi
Max. Operating air scour flow	7 Nm^3/h/Module	4.1 scfm/h/Module
Air scour pressure	0.35 – 2.5 bar	5.0 – 36.25 psi
Filtrate flux @25°C	40 – 95 LMH	24 – 56 gfd
Temperature	1 – 40°C	34 – 104°F
Operating pH range	2 – 11	
Cleaning pH range	2 - 12	
NaOCl, cleaning (maximum)	2,000 mg/L	

4.1 Process configuration of MEV System

The typical MEV UF system consists of the following main components:

- MEV pressure vessel with membrane modules
- Feed pump
- Backwash pump
- CIP recirculation pump
- Air blower or compressor
- CEB metering pumps
- Pre-treatment strainers (can be installed inside or outside the pressure vessel)
- CIP tank
- Backwash tank
- Automatic valves
- Pressure meters
- Flow meters
- Safety devices (pressure switches, pressure relief devices, vacuum breakers)

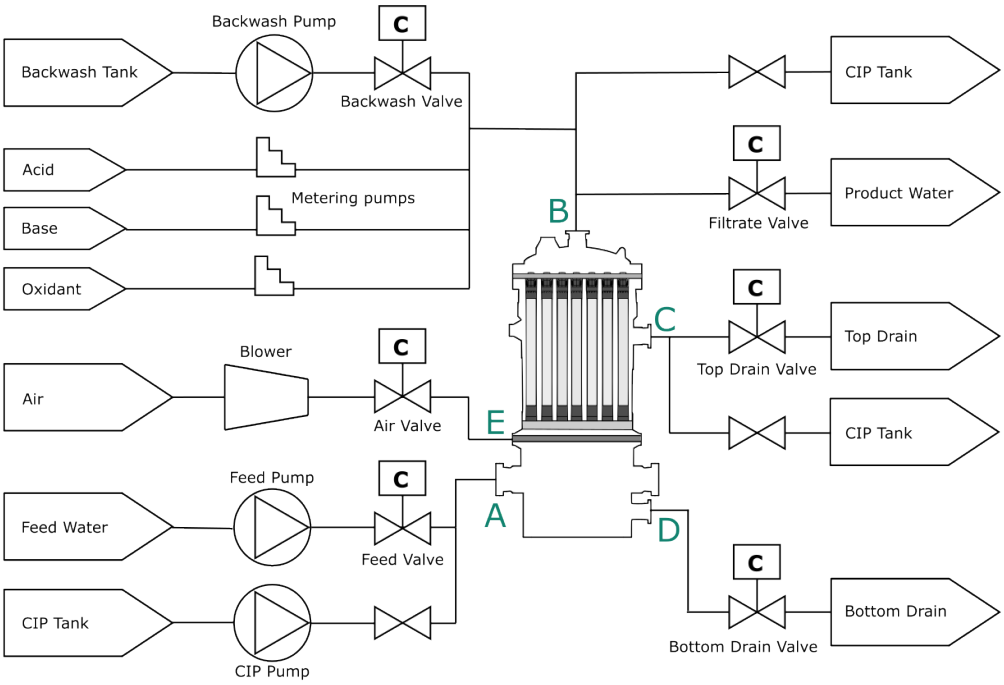

Figure 9: Process diagram with main components

Normal operation refers to the routine operating sequence of the MEV Units and includes the operating and backwash steps. General sequence of operations in one complete filtration cycle is as follows:

- Filtration
- Air Scour
- Draining
- Backwash
- Forward Flush

4.2 Filtration

Ultrafiltration systems are most of the time in filtration mode while in operation. Typically, all feed is converted to filtrate, in what is referred as dead-end filtration (as opposed to cross-flow filtration where a fraction of the feed leaves the system as reject). Filtration cycles typically range from 20 – 90 minutes, depending on the feed water source and quality. Figure 10 shows a diagram of the filtration step in the MEV system.

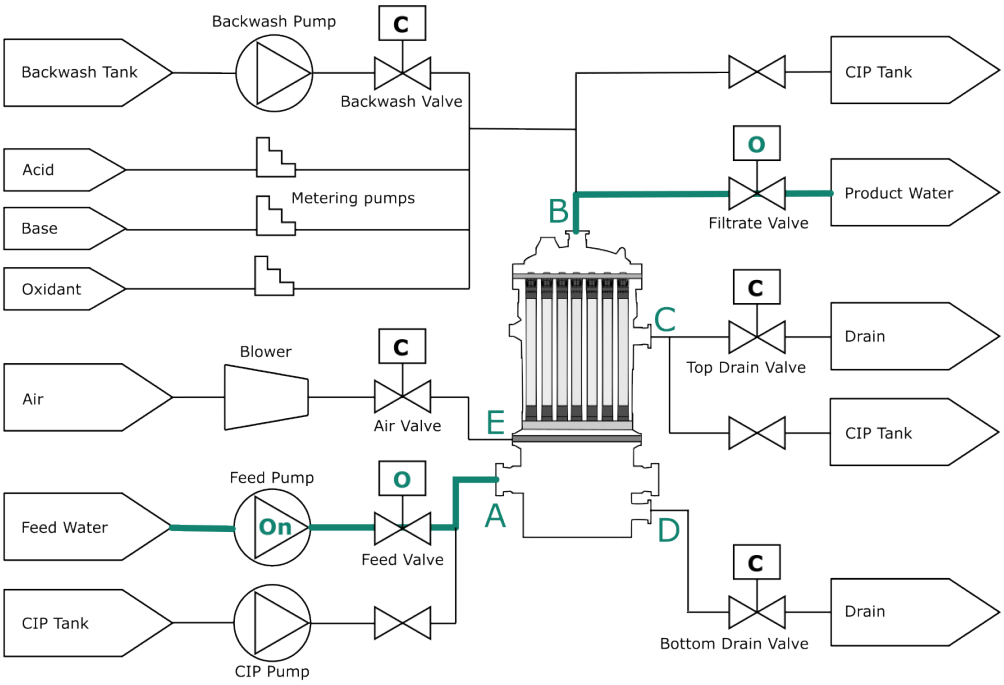

Figure 10: Filtration

Ultrafiltration systems are typically designed to operate at constant flowrate. As the solids build on the membrane surface, the transmembrane pressure (TMP) increases and eventually the foulants must be removed through a Backwash sequence. The Backwash sequence is generally initiated based on time. Alternatively, it can be initiated based on volume of filtrate or TMP set point (the latter is more appropriate for highly variable feed water quality). The Backwash sequence includes an air scour, draining, backwash through the bottom drain, backwash through the top drain and a forward flush.

At initial plant start-up the modules and the strainer must flushed in order to remove any residual storage chemicals or air trapped. This flush occurs on the outside of the fibers, i.e., no filtrate is produced. The forward flush flow is removed from the vessel through the connection in the upper part of Zone 2 (nozzle C). Once the initial flush is done, the plant can begin producing filtrate. When starting the initial filtration cycle, the flow should be slowly increased before being put into operation at the design conditions.

4.3 Air Scour

The air scour step is used to loosen particulates deposited on the outside of the membrane surface. Pressurized air can be pumped in via connection at the lower part of zone 2 (nozzles E). Displaced feed concentrate is allowed to discharge through top drain outlet connection (nozzle C) for disposal, as shown in Figure 11. Since nozzle C is usually open to atmosphere, the required air pressure is as low as the water head it must overcome.

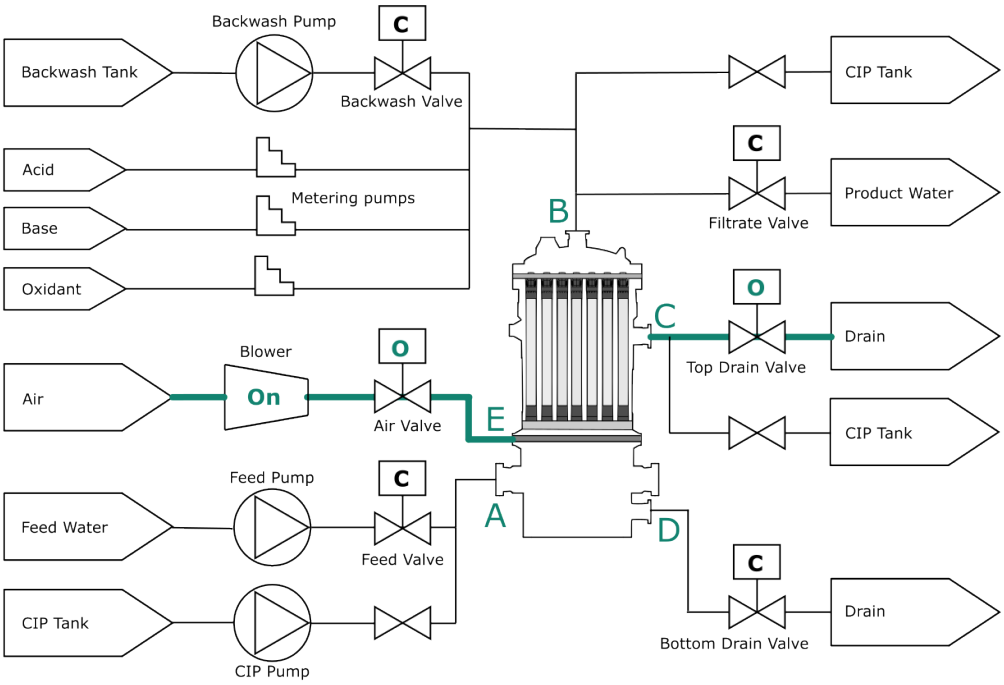

Figure 11: Air scour

4.4 Gravity Drain

Once the air scour step is finished, the vessel must be drained by gravity in order to flush out of the system the material dislodged from the membrane surface by the preceding air scour step, as shown in Figure 12. Vessel is drained through connection located at the bottom of the vessel (nozzle D). The duration of this step will depend on the system volume and piping layout, but it is typically set to 30 – 60 seconds. If gravity drain is not possible due to the system configuration, or it takes too long, it can be substituted by a forced flush through the bottom outlet of the vessel (nozzle D) using the backwash pump, however this will consume more water and energy.

During the draining process, the nozzle C can be open to the atmosphere to allow the air to enter the vessel. If the pipe from nozzle C port is directly connected to the drain from the nozzle D port, special precautions must be taken to prevent the outlet flow from blocking the air inlet. The vacuum generated during vessel drain can be harmful to the pressure vessel and should be considered during the design of the piping and the safety devices, please refer to the vessel manual for vacuum limits.

CAUTION	
	To prevent vacuum, ensure the air can freely enter the vessel before initiating the draining procedure.

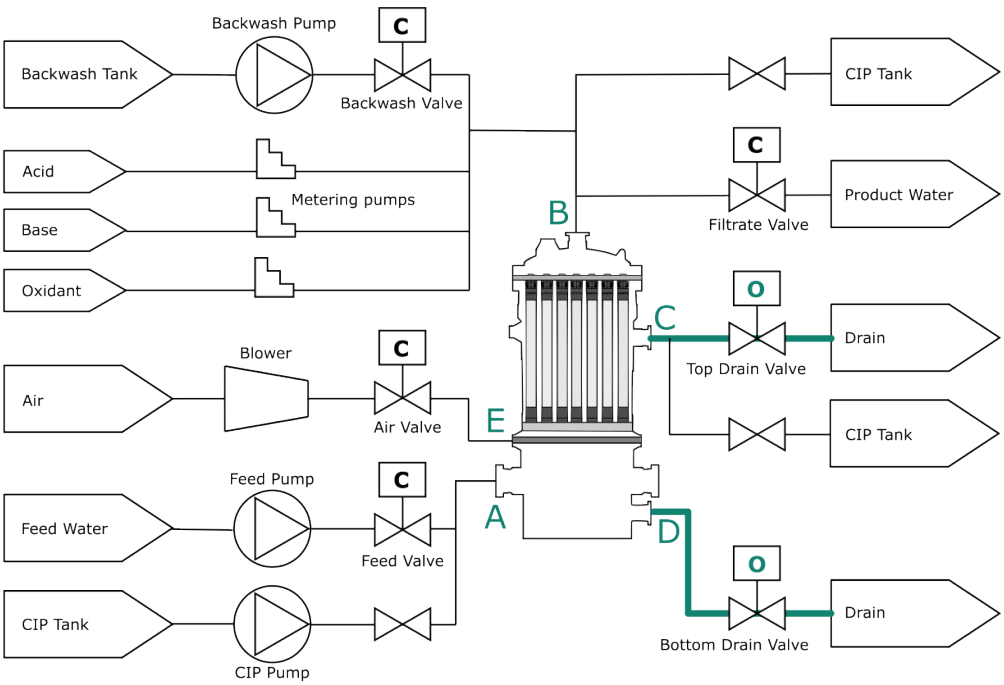

Figure 12: Gravity drain

4.5 Backwash (BW)

After draining, the backwash step is performed. For backwashing, the flow direction is reversed so that UF filtrate quality water is washed back through the unit from chamber 3.

4.5.1 UF Module Backwash

To backwash the UF Modules, UF filtrated backwash water enters from nozzle B and flows from zone 3 into zone 2 through the UF fibers walls, flowing from inside out. This reversal of the flow dislodges the solids deposited on the outer surfaces of the fibers.

A **bottom draining backwash** is performed first (first backwash step). UF filtrated water flow is reversed from the inside of the fiber to the outside. The backwash flow is removed from the vessel through the bottom drain on the vessel (nozzle D), as shown below.

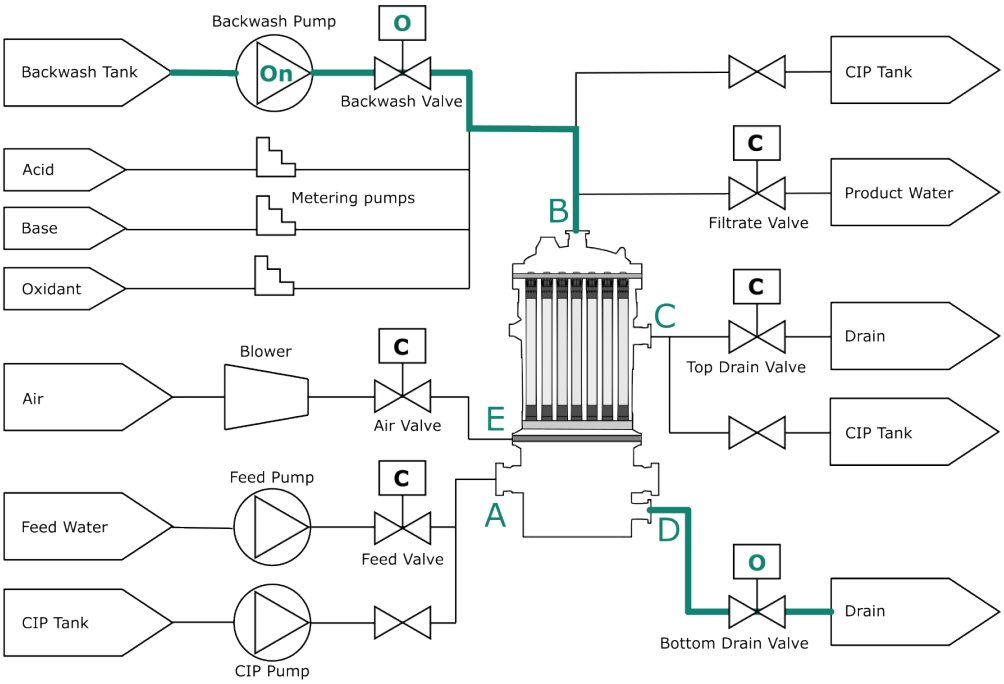

Figure 13: Backwash, bottom outlet

The second backwash step is performed to remove contaminants through the top of the vessel (**top draining backwash**). UF filtrated water flow is reversed from the inside of the fiber to the outside and backwash flow is removed from the vessel through the top backwash/forward flush outlet connection (nozzle C), as shown below.

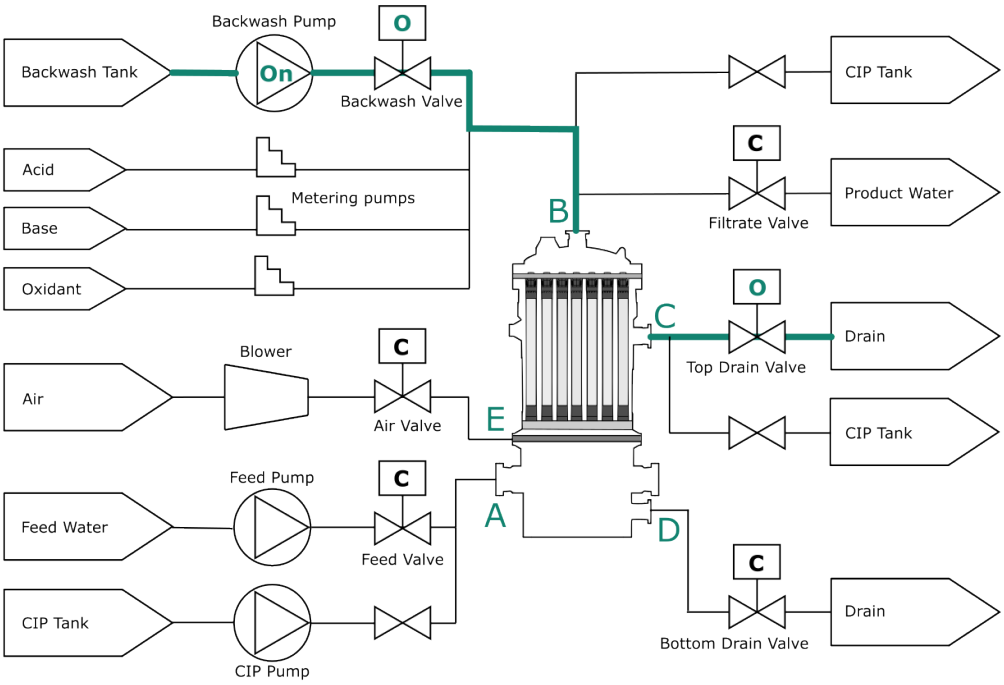

Figure 14: Backwash, top outlet

4.5.2 Forward Flush

The backwash sequence finalizes with a forward flush. In this step, feed water is used to rinse the system to remove remaining solids and the air that might have got trapped in the system during the precedent steps. Water flows on the outside of the fibers (feed side) with the filtrate valve closed and exits through the top backwash/forward flush outlet connection (nozzle C), as shown below. This step typically lasts 30 – 60 seconds or long enough to refill the system and purge air and water from the outlet. After this, the system returns to Filtration mode and the cycle starts again.

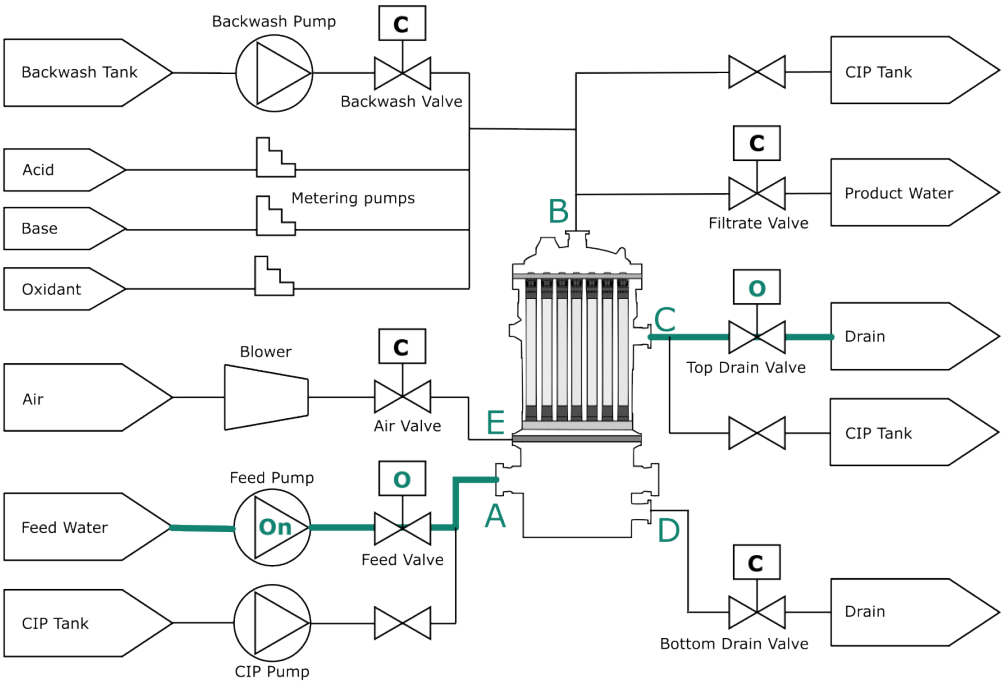

Figure 15: Forward Flush

4.6 Alternative Operation Modes

The following section details several non-standard strategies, as alternatives to the described above, to manage membrane fouling with the aim of simplifying the process, reducing the system footprint and installation costs, reducing the energy and chemical consumption, generating less waste, or increasing the system availability and recovery. These strategies are project specific and need to be validated depending on the application and feed water source and quality. For further details please contact DuPont.

4.6.1 Elimination of Backwash

Depending on the feed water source and quality it might be possible as well to remove the backwash step from the UF operation (and therefore all the equipment associated to it) and rely on regular Air Scour and Forward Flush as the only hydraulic methods to help removing membrane fouling. However, regular chemical cleanings must be still applied. Please contact DuPont for further details.

Some of the benefits of the elimination of the Backwash step are:

- Increased UF system recovery.
- Reduced UF trains size (i.e. fewer UF modules needed).
- Reduced UF system footprint and process complexity (due to the elimination of backwash pumps, tanks, piping, CEB dosing pumps and injection points, etc.).
- Reduced energy consumption.
- Less volume of waste generated.

4.6.2 Backwash with RO Brine

In integrated systems where UF is used as pretreatment of RO, it might be possible to backwash the UF system with RO brine, instead of the standard approach using ultrafiltrate water, with no detrimental impact on the UF system performance or membrane integrity. This is only feasible for specific water sources and under certain conditions and simply refers to backwash and not to chemical cleanings. Please contact DuPont for further details.

Some of the benefits of using RO brine for UF backwash as opposed to ultrafiltrate water are:

- Increased UF system recovery.
- Reduced UF trains size (i.e. fewer UF modules needed).
- Potential to eliminate the equipment associated to backwash pumping, and reduce energy consumption, if the residual brine pressure is used.
- Less volume of waste generated.

5 Water Chemistry and Pretreatment

5.1 Water Chemistry

As introduced in the previous chapter, ultrafiltration is a size exclusion membrane process that rejects particles, pathogens, high molecular weight species, and ultimately lowers turbidity. However, UF does not reject any dissolved salts, dissolved organics, or other species like true color or taste and odor. Feed water can encounter different type of compounds that can lead to membrane fouling. A deeper introduction to fouling is addressed in Chapter 6.

In order to have a comprehensive understanding of the feed water quality and its fouling potential, there are a few key parameters that need to be monitored during operation. This section will introduce these parameters, which are summarized in Table 1 together with their recommended monitoring frequency.

Turbidity: Sediments, clay, silt, small particles, solids etc. cause a liquid to appear turbid, "hazy". These particles can, host or shield microorganisms like bacteria and viruses. Turbidity is measured by the intensity of light that passes through the water sample and expressed in NTU (Nephelometric Turbidity Units). DuPont™ IntegraTec™ ultrafiltration modules provide consistent product water with turbidity values < 0.1 NTU.

TSS (Total Suspended Solids): It is the measure of the total weight of solids contained in a water sample, and is expressed in mg/L. This parameter is more accurate than turbidity (i.e., turbidity usually does not detect very fine particles).

SDI (Silt Density Index): Is a Fouling Index. This parameter provides an indication of the particulate fouling potential of the water (see Figure 16). It is based on the measurement of the time it takes to collect 500 mL of water sample through a paper filter of 0.45 µm at the start of the test (t_i) and after the water has flowed through the filter at 2.1 bar (t_f) for 15 minutes (T). SDI number is calculated by Equation 1:

$$SDI_T = \left(1 - \frac{t_i}{t_f}\right) \cdot \frac{100}{T} \qquad \text{Eq. 1}$$

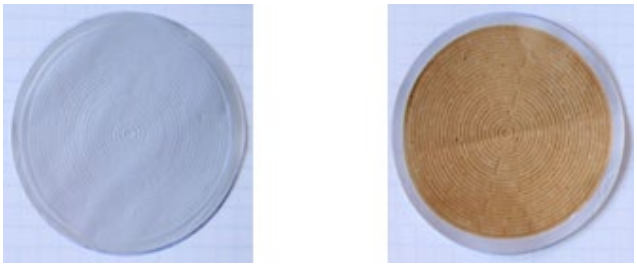

Figure 16: SDI15 filters before and after the test

TOC (Total Organic Carbon): It is the most widely used parameter to determine the organic content in water. It includes Natural Organic Matter (NOM) and synthetic sources. It is indicative of the tendency of the water to cause organic fouling and biofouling in membranes. It is expressed in mg/L. A TOC value > 2 mg/L indicates a high probability of biofouling. The recommended TOC level for RO feed water is < 3 mg/L.

DOC (Dissolved Organic Carbon): Fraction of TOC which is dissolved (filtered through 0.45 µm). Generally TOC and DOC are the same value, except in wastewaters and some surface waters.

COD (Chemical Oxygen Demand): It is a measure of the amount of compounds in a sample which have been oxidized by a strong oxidizing agent. Although inorganic substances such as Fe may also be subject to oxidation, for most natural and industrial waters, the matter to be oxidized is organic in nature.

BOD (Biological Oxygen Demand): Similar to COD except BOD detects substances that are susceptible to biological oxidation which indicates biologically active organics. Therefore COD & BOD can be used to characterize the organic load of water. Expressed as mg/L of Oxygen.

UV_{254} Absorbance: It is an indirect measurement of NOM, based on the fact that most organics compounds can absorb UV light. Expressed in cm^{-1}. Surrogate of TOC. Above 0.5 cm^{-1} indicates biofouling is likely.

SUVA (Specific UV Absorbance): Ratio between UV_{254} and DOC (if > 4, mostly humic matter; if < 2, indication of algae bloom).

O&G (Oil & Grease, Hydrocarbons): Even in very small quantities i.e., < 0.05 mg/L, it can cause accelerated fouling in membranes.

Iron and Manganese: If they are in oxidized form, behave as particles and can be rejected by membrane systems, but will cause fouling. Iron (Fe) can be naturally occurring (e.g., well waters), coming from corrosion of upstream piping and/or equipment, or residuals from pre-coagulation processes.

Calcium and Magnesium: Hardness in water is due primarily to Ca and Mg ions. Based on hardness, the water can be classified as Soft (up to 60 mg/L as $CaCO_3$), Hard (up to 180 mg/L as $CaCO_3$) and Very Hard (> 180 mg/L as $CaCO_3$). Hardness has no harmful effects on health, but leads to formation of scaling deposits in pipes, equipment or membranes.

Conductivity: The electrical conductivity of water is linearly related to the total dissolved solids (TDS). It is the ability of the water to conduct an electrical current. Expressed in µS/cm.

pH: Is a numeric scale used to express the acidity or alkalinity of the water. Solutions with a pH less than 7 are acidic and solutions with a pH greater than 7 are basic. Pure water has a pH of 7 and is neutral. In water, high pH causes a bitter taste, water pipes and equipment become encrusted with deposits. Low-pH water will corrode or dissolve metals and other substances.

Silica: Can be Reactive Silica (Soluble) or Un-Reactive Silica (Colloidal). Colloidal form can cause fouling in membrane systems.

Table 3: Recommended Water Quality Sampling Program

Parameter	Units	Analytical Method	Frequency	Sample source
Minimum Recommended Parameters:				
Turbidity	NTU	APHA 2130B	Weekly	Feed + filtrate
Total Suspended Solids (TSS)	mg/L	APHA 2540D / EPA 160.2	Weekly	Feed + filtrate
Total Organic Carbon (TOC)	mg/L	APHA 5310C	Weekly	Feed + filtrate
Dissolved Organic Carbon (DOC)	mg/L	EPA 415.1	Weekly	Feed + filtrate
Iron, Fe	mg/L	APHA 3120B / EPA 200.7	Weekly	Feed
Calcium, Ca	mg/L	APHA 3120B / EPA 200.7	Weekly	Feed
Magnesium, Mg	mg/L	APHA 3120B / EPA 200.7	Weekly	Feed
Additional Recommended Parameters:				
Conductivity	µS/cm	APHA 2510B / EPA 120.1	Weekly	Feed
Total Dissolved Solids (TDS)	mg/L	APHA 2540C	Weekly	Feed
Total Volatile Suspended Solids (TVSS)	mg/L	APHA 2540E	Weekly	Feed
Total Alkalinity	mg/L as $CaCO_3$	APHA 2320B / EPA 310.1	Weekly	Feed
Total Oil & Grease - Total Fraction	mg/L	APHA 5520C	Weekly	Feed
Silica	mg/L	ASTM D859 - 10	Weekly	Feed
Manganese, Mn	mg/L	APHA 3125B / EPA 200.7	Weekly	Feed
Sulfate, SO_4	mg/L	ASTM D516 / EPA 300	Weekly	Feed
UV-254	Abs/cm	APHA 5910B	Weekly	Feed
Chlorophyll-A	mg/m^3	APHA 10200H	Weekly	Feed
Total Coliform	CFU/100 mL	Cultivation APHA 9215 & 9222	Weekly	Feed + filtrate
Total Viable Counts (22°C, 37°C)	CFU/100 mL	Cultivation APHA 9215 & 9222	Weekly	Feed + filtrate
Enterococci/ E-Coli	CFU/100 mL	Cultivation APHA 9215 & 9222	Weekly	Feed + filtrate
Adenosine Triphosphate (ATP)	mg/L	ASTM D4012 - 81	Weekly	Feed + filtrate
Parameters In-Line or by Handheld Instrumentation:				
Turbidity	NTU	ASTM D6855 & D6698	Daily	Feed + filtrate
Conductivity	µS/cm	ASTM D1125	Daily	Feed
pH	--	ASTM D1293	Daily	Feed
Temperature	°C	-	Daily	Feed
Silt Density Index	--	ASTM-4189-95	Daily	Feed + filtrate

DuPont™ IntegraTec™ Ultrafiltration Modules designs are based on qualified feed water conditions as shown in Table 4. The UF modules can tolerate period excursions in feed water quality as shown as the maximum recommended. If the feed water quality is outside of the design basis range shown below, a pilot study should be operated to confirm performance or pretreatment must be considered. If the system is designed and installed to the qualified conditions below but the feed water quality is not maintained DuPont Water Solutions should be consulted.

Table 4: Qualified Feed Water Quality Parameters

Parameter	Unit	Desirable	Maximum Recommended[1]
Turbidity	NTU	< 50	300
TSS	mg/L	< 20	100
TOC	mg/L	< 10	40
COD_{Mn}	mg/L	< 20	60
Oil & Grease	mg/L	0	< 2
Particle Size	micron	< 150	300
pH continuous	-	6-9	2-11
pH cleaning	-	2-11.5	1-12
Temperature	°C	< 35	40
Feed Pressure	bar	According to the pressure vessel design	
TMP	bar	< 1	2.1
Cl_2 continuous	mg/L	<0.5	200
Cl_2 cleaning	mg/L	2,000	5,000

[1] Note: Maximum values recommended refer to continuous operation, consult your local representative for values beyond those shown.

5.2 Ultrafiltration Pretreatment

Depending on the feed water characteristics, pretreatment might be needed in combination with the UF process. Dissolved substances are not removed by UF membranes, so they must be transformed into particulate form if they are the target of the UF process.

Otherwise, very little pretreatment is required if microorganisms and particles are the target contaminants. Prefilters (100 – 300 µm) need to be installed upstream the UF process to protect the UF system from large particles, sand, etc. See Table 5 for strainer selection guidelines. A variety of technologies can be used such as self-cleaning screens and bag, cartridge, or disc filters.

Table 5: Strainer selection guidelines

Source Water	Strainer Size[2]
Bore Well / Ground	≤ 300 µm
City / Tap Water	≤ 300 µm
Surface (Pretreated)	≤ 300 µm
Surface (Untreated)	≤ 300 µm
Seawater	100 – 300 µm[3]
Wastewater (Secondary, Tertiary Effluent)	≤ 300 µm

Depending on the type of water or range of feed water parameters other pretreatment technologies such as coagulation/flocculation, clarification/sedimentation, flotation or granular media filtration may also be recommended.

Some MEV vessel designs can incorporate a self-cleaning strainer in the bottom zone to save plant footprint.

Coagulation/Flocculation: Chemical and Physical process to form particle aggregates (flocs) from silt, clay, colloids, suspended material, microorganisms, NOM (by adsorption in the flocs) for removal in subsequent steps such as clarification, flotation or granular media filtration. In coagulation, chemicals such as alum or ferric salts are added to the water to reduce repulsion forces between particles ("*destabilization*"). This enables particles to become attached to each other. It is achieved by rapid mixing ("*flash mixing*") in order to disperse the coagulant quickly in the water. In contrast, flocculation consists in a low-intensity mixing to increase the rate of agglomeration. Chemicals might be used to assist, such as cationic, anionic or non-ionic polymers.

Clarification/Sedimentation: Basins designed to decrease solids concentration typically after a Coagulation + Flocculation step, or removal of settleable solids from turbid waters without coagulant addition. This pretreatment is typically used in inlet waters with average turbidities > 30 NTU or spikes above 50 NTU. It can achieve clarified water < 2 NTU and SDI < 6. The water retention time in the basins is typically 2 – 4 hours. Types of this pretreatment include:

- **High-Rate Sedimentation (Lamella Settlers):** It uses inclined plates for more efficient removal of solids (by providing a larger settling area), typically at 60° and 5 cm separation. It allows higher loading rates; reduced footprint (65 – 80% compared to conventional clarifiers). Appropriate when inlet turbidity > 50 NTU.
- **Microsand Ballasted Clarification**: Small sand grains are added in the flocculation basin to act as nucleus for floc formation. Increased settling velocity. Reduced time and footprint requirements.

Dissolved Air Flotation (DAF): Solids removal occurs at the surface of the clarifier, through flotation, rather than at the floor (i.e., clarified water is removed from bottom, instead of from top). Smaller footprint than conventional settlers. DAF is ideal for removal of light particles with slow settling time (e.g., coagulated NOM), algae or Oil & Grease, when turbidity < 50 NTU. Micro air bubbles (~50 µm) adhere or push-up the flocs at the DAF inlet and force them to float. It includes Coagulation + Flocculation chambers. It can achieve clarified water < 0.5 NTU.

[2] Recommended for initial specification, and to be reviewed against site-specific raw water quality and project drivers.

[3] Strainer size of 100 µm or lower is recommended to control the growth of barnacles and mussel larvae inside the UF system pipes, as well as to prevent sand particles to reach the UF membranes.

Granular Media filtration: It is the oldest (4000 BC) and most commonly used pretreatment process. The water flows through one or more layers of porous granular medium (e.g., sand, pumice, anthracite) to remove suspended solids. Typically, it removes 90 – 99% of the solids. There are different types of granular media filtration:

- **Single-Medium**: Typically sand or anthracite, only if feed turbidity is < 2 NTU, TSS < 3 mg/L.
- **Multimedia**: Pumice or Anthracite over Sand. It is the most common.

Two-Stage (for > 20 NTU and TOC > 6 mg/L): Typically, 1st stage is coarse single or dual filter (60 – 80% removal) and 2nd stage is polishing dual-media filter which removes 99% remaining fine solids. TOC removal is low, typically 20 – 30% or even up to 50% if a carbon layer is installed at the top. It can achieve outlet turbidity < 0.1 NTU.

In addition, granular media filtration systems can be classified:

As per Driving Force:

- **Gravity Filters**: Need only 2 – 3 meters (6.5 – 9.8 ft) head, housed in open tanks.
- **Pressurized Filters**: need higher pressure; enclosed in steel vessels.

As per Filtration Rate:

- **Slow Sand Filters:** Gravity. Typically < 0.5 m/h (gpm/ft^2) loading rate. Best for feeds < 5 – 10 NTU and TOC < 3 mg/L. They can achieve filtrate turbidity < 1 NTU.
- **Rapid Sand Filters:** they can be gravity or pressurized. Up to 12 m/h (gpm/ft$_2$). Usually require pre-coagulation. They can achieve filtrate turbidity < 1 NTU.
- **High-Rate Filters:** Pressurized filters. Up to 30 m/h (gpm/ft$_2$). They can achieve filtrate turbidity < 0.5 NTU with coagulant aid.

As per Direction of Flow

- **Downflow**: It is the most common type. Water flows downwards.
- **Upflow**: Rarer, water flows upwards. Used typically in activated carbon filters or roughing filters

6 Chemically Enhanced Backwash (CEB)

6.1 Membrane Fouling

Fouling in UF process is understood as the phenomenon that leads to a gradual increase in the transmembrane pressure (TMP) for a constant product flow (or vice versa, a decrease in the filtrate flow at a constant feed pressure), typically caused by deposition or adsorption of the contaminants present in the feed stream on the membrane surface or in the inner structure.

Occasionally, fouling of the membrane surface occurs and is caused by:

- Inadequate pretreatment
- Overdosing of upstream process coagulants
- Improper materials selection (pumps, piping, etc.)
- Failure of chemical dosing systems
- Inadequate backwash and unsuitable shutdown
- Improper operational control
- Slow build-up of precipitates over extended periods
- Change in feed water composition
- Biological contamination of the feed or filtrate water
- Oil & inorganic contamination of the feed water

From the point of view of the fouling mechanism, there are basically three categories for fouling being cake formation, pore adsorption and pore blocking.

Cake Formation normally occurs when the contaminants are too large to enter the membrane pores, so they deposit on the membrane surface and create an additional resistance to the passage of water, resulting in a TMP increase.

Pore Adsorption typically happens when the contaminants are smaller than the membrane pore size, so they deposit on the internal walls of the pores, hence reducing the diameter of the pores and therefore providing also an additional resistance to the flow.

Finally, **Pore Blocking** takes place when the contaminants are of similar size to the membrane pores, so that blocking occurs and therefore the number of actual pores is reduced, providing also an additional resistance to the flow.

According to the nature of the contaminants, the fouling can also be categorized as follows:

Particulate: This type of fouling is caused by organic and inorganic particles, suspended solids, colloids and turbidity present in the feed, which are not in dissolved form, and typically larger than the pore size. This can be reduced by operations upstream the UF system such us coagulation, sedimentation, clarification or media filtration. The common cleaning method for this type of fouling is air scour and backwash.

Biological fouling: This is caused by the attachment and growth of microorganisms on the membranes, which can also lead to the formation of a viscous biofilm. This can be reduced by using in-line chemical feed of chlorine or biocide or by elimination of nutrients by using adsorption (e.g., powdered or granular activated carbon, PAC or GAC), or coagulation upstream the UF system. The common cleaning method for removal of biological fouling is cleaning with oxidizers or biocides (e.g., Cl_2, H_2O_2, SBS). Note PAC is available in different grades and can damage the membranes. If using PAC consult with DuPont TS&D.

Inorganic fouling: This is caused by the precipitation of inorganics on the membrane (e.g., Ca, Mg, Fe, Mn), and can be reduced by using oxidation/precipitation and filtration as pretreatment to the UF or in some cases using low hardness water for the alkali chemically enhanced backwash. The common cleaning method for removal of inorganic fouling is chemically enhanced backwash with acid at pH 2 (e.g., HCl, H_2SO_4, Citric, or Oxalic Acid).

Organic fouling: This is the one of the major causes of fouling in the UF processes and is caused by organics adsorbing on the membrane (silt, organic acids, humic substances), as the majority of these substances are too small to be retained by the membrane and hence go through. This can be reduced by using PAC, GAC, or coagulation upstream the UF

system. The common cleaning method for removal of organic fouling is cleaning regimes with alkali at pH 12 (e.g., NaOH).

Table 6: Summary of the fouling types and methods of control

Fouling Type	Cause	Prevention	Cleaning Method
Particles	SS, Colloids, Turbidity	Coagulation, Clarifiers...	Air Scour / Backwash
Biological	Microorganisms growth	Bacteriological Control (e.g., Cl_2 in line). Elimination of nutrients (PAC, GAC, Coagulation,...)	CEB/CIP with oxidizers/biocides
Inorganic	Inorganic precipitation (e.g., Fe, Mn, Ca)	Oxidation/Precipitation + Filtration. Use low hardness water for CEB Alkali.	CEB/CIP Acid @ pH ~ 2 (e.g., HCl, H_2SO_4, Citric Acid, Oxalic Acid...)
Organic	Organics adsorption (silt, organic acids, humic substances,...)	Coagulation, PAC, GAC,...	CEB/CIP Alkali @ pH ~ 11 – 12 (e.g., NaOH)

6.2 Chemically Enhanced Backwash (CEB)

CEB operation refers to a Chemically Enhanced Backwash, where chemicals (e.g., chlorine, acid or base) are added in the Backwash stream in order to increase the cleaning effectiveness. The type of chemical used depends on the foulant (refer to Table 4 above), which might be a combination of different ones or change seasonally. The frequency of a CEB is dependent on the feed water quality but typically is once per day to once per week. For high quality feed waters, it may not be required.

The CEB process is typically programmed to occur automatically at a preset frequency but this can be field adjusted after gaining site specific operating experience. Alternatively it can be initiated based on a TMP set point. The CEB is performed using UF filtrate.

The CEB is performed following the same steps of a normal backwash sequence except a soak step is added after the addition of the chemicals, for 5 – 20 minutes, to allow time for the chemicals to react with contaminants that have attached to the membrane surface or penetrated the fiber wall. It is recommended backwash bottom first and then backwash top as the second step, to make sure that the system remains filled with the chemical solution during the soaking time. Intermittent air scour (e.g., 5 – 10 seconds every 5 minutes) can be applied as well during the soak step to increase effectiveness.

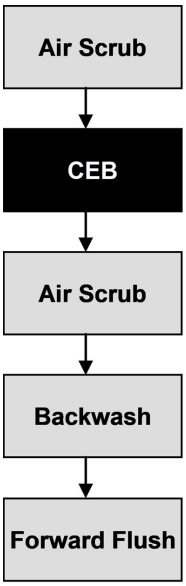

Figure 17: CEB Chart

After the soak a routine backwash including air scour, gravity drain, top and bottom backwash, and forward flush is performed to remove any remaining particulates and purge residual chemicals. After a CEB and at the start of the operating step, the initial filtrate produced might need to be sent to waste to remove residual chemicals. This step is dependent on the system piping and valve design and the downstream requirements for the filtrate. In addition, the CEB can be performed at reduced flux than that used for standard backwash (e.g., 80 LMH).

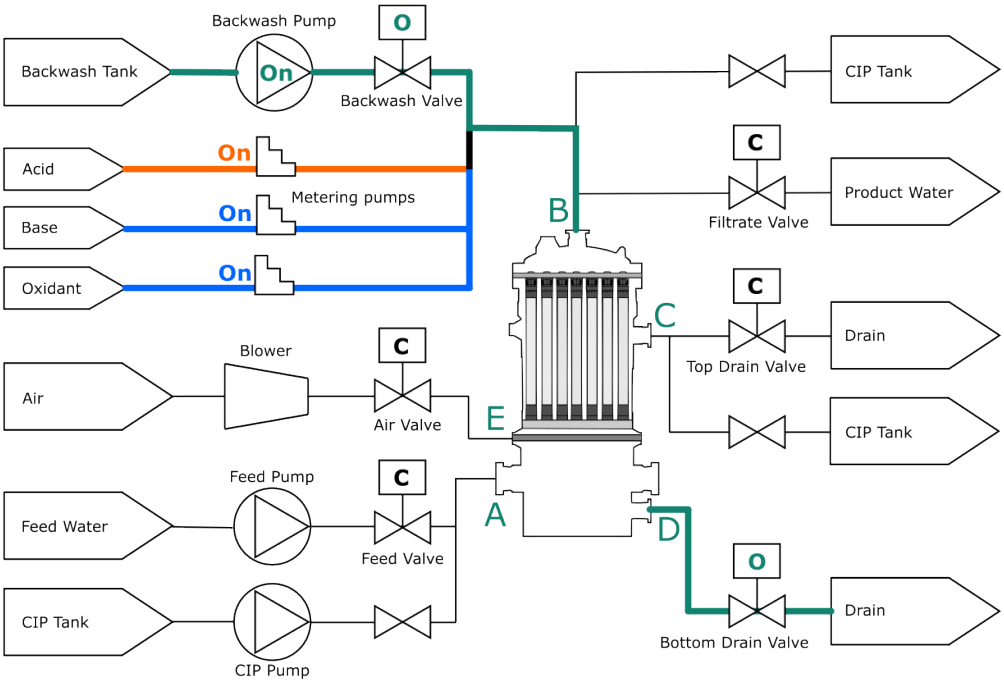

Figure 18: CEB chemical injection, bottom outlet

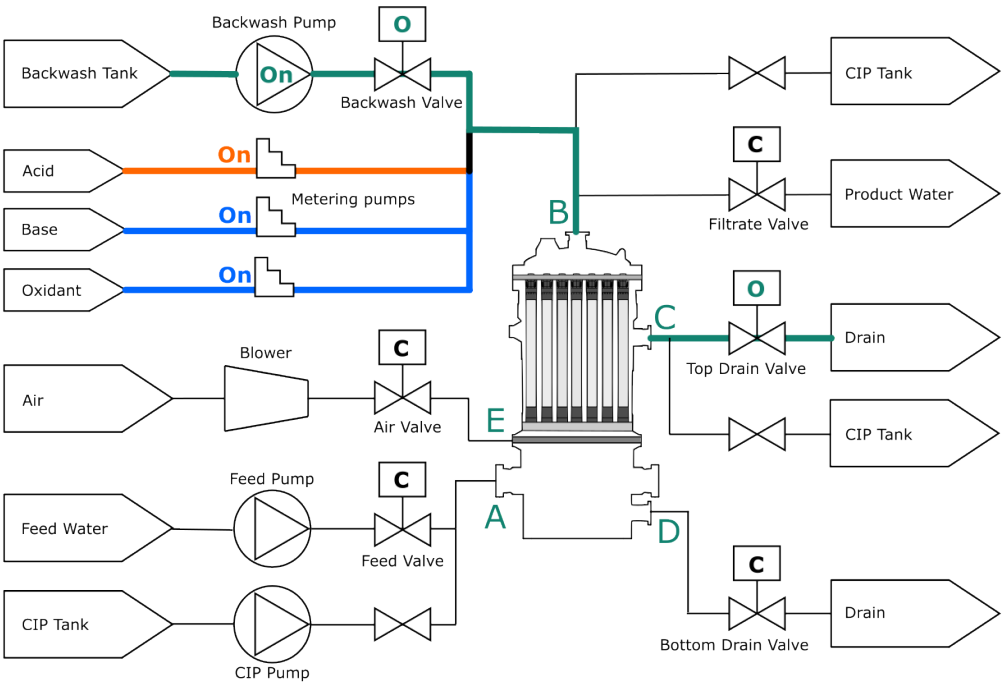

Figure 19: CEB chemical injection, top outlet

6.3 Alternative Cleaning Protocols

The following section details several non-standard strategies, as alternatives to the described above, to manage membrane fouling with the aim of simplifying the process, reducing the system footprint and installation costs, reducing the energy and chemical consumption, generating less waste, or increasing the system availability and recovery. These strategies are project specific and need to be validated depending on the application and feed water source and quality. For further details please contact DuPont.

6.3.1 Mini-CIP

This approach consists of substituting the standard approach based on regular Chemically Enhanced Backwash (CEB) by Cleanings in Place (CIP) of short duration and is applicable to all water types. For this purpose, the existing auxiliary system used for the standard CIP is employed to perform more frequent but shorter chemical cleanings, called mini-CIP, so there is no need of additional installation or hardware. However, due to the relatively high frequency of mini-CIP (i.e. typically from 1 to 3 times per week), it is recommended to automate the process in order to reduce labor.

The total duration of the mini-CIP is typically 30 minutes and includes a regular Backwash pre-cleaning, a heated chemical solution recirculation step with a soaking period in between (with intermittent Air Scour), and a final Backwash post-cleaning. Note that the mini-CIP substitutes the CEB, not the standard intensive CIP program which still might be needed regularly.

Some of the benefits of the mini-CIP approach as compared to CEB are:

- Increased UF system recovery and availability (as the frequency of mini-CIP and water consumption is typically lower than CEB).
- Lower UF system footprint and system complexity, by reducing the hardware associated to the CEB systems.
- Higher cleaning efficiency, due to the use of recirculation, temperature aid, higher flexibility to use special chemicals and the possibility to use low TDS water (e.g. RO permeate) as solvent.
- Reduced chemical consumption and waste, due to the operation in a closed loop as opposed to CEB's flush-through mode.
- Lower risk of RO membrane oxidation in integrated systems due to the lower system exposure to chlorine as compared to more frequent on-line CEB's.

7 Clean-In-Place (CIP)

7.1 Introduction

The fouling of membrane surfaces results in the gradual performance decline of the UF System in terms of high operating transmembrane pressure, lower sustainable filtrate flow or flux, and/or high chemical and power consumption.

Clean-in-Place (CIP) may be accomplished effectively due to the excellent physical properties and chemical tolerances of the Hydrophilic-Polyvinyldifluoride (H-PVDF) membrane material and module components, which are compatible and resistant to elevated levels of pH, chlorine oxidants, and temperature. Concentration, cleaning time, temperature, intermittent air scour, and hydraulic conditions during the cleaning process are important considerations which will affect cleaning efficiency.

UF system performance should be monitored on a regular and frequent basis. If cleaning is delayed too long, fouling may become irreversible and result in potential physical damage to the UF module or appurtenance equipment. The DuPont Ultrafiltration Normalization Tool may be used to analyze UF system performance on a normalized basis, to remove or minimize the effects of temperature, pressure, and flow so that the user may differentiate between normal phenomena and real performance upsets due to fouling. The DuPont Ultrafiltration Normalization Tool is available from your local DWS Technical Service.

CIP is most effective if it is tailored to remove the specific fouling problem. Sometimes a wrong choice of cleaning chemicals can make a situation worse. Therefore, the type of foulants on the UF membrane surface should be understood prior to the CIP, so that the most effective CIP cleaning solution and sequence may be used for the procedure. There are different ways to accomplish this:

- Analyze feed water quality.
- Review results of previous cleanings.
- Remove and inspect the feed end of the Module for indication of contaminants.
- Inspect the waste discharge after air scour in the backwash step for indication of contaminants. Sample may be visually inspected or analyzed in laboratory.
- Analyze spent SDI filter paper after grab sample SDI-5 test at UF feed water.
- Destructive autopsy if methods above fail to identify the foulant.

7.2 Safety Precautions

NOTE	
	ATTENTION! Observe the following guidelines!

- When using any chemicals indicated here or in subsequent sections, follow accepted safety practices. Consult the chemical manufacturer for detailed information about safety, handling and disposal.
- When preparing cleaning solutions, ensure that all chemicals are dissolved and well mixed before circulating the solutions through the modules.
- During pumping and recirculation of cleaning solutions, observe maximum temperature and pH limits. Please refer to Table 7 below.

Table 7: pH and temperature limits during cleaning

Chemical Type	pH, Max/Min	Temp., Max
Alkaline Solution	12, Max.	40°C (95°F)
Acid Solution	2, Min.	40°C (95°F)

7.3 CIP Requirements

During regular operation, the surface of the fibers of the UF modules may become fouled by particles, biological matter, colloidal particles and/or insoluble organic constituents. Deposits build up on the fiber surfaces during operation, until they result in an increase of TMP to levels or a decrease of normalized filtrate flow that cannot be recovered on sustainable basis by regular backwash and CEBs.

Modules should be cleaned to restore membrane permeability, when one or more of the below parameters are encountered during regular operation, after a CEB event. Permeability is the flux, per unit of transmembrane driving force, and is expressed as LMH/bar or gfd/psi.

- Normalized Permeability drops by 50%
- Normalized TMP increases by 1 bar (14.5 psig) from initial TMP
- Operating TMP reaches a maximum 2.1 bar (30.5 psig)
- In the event that you do not normalize your operating data, please use the above values for general indication of when to initiate a cleaning event

If delayed too long, the membrane fouling may become irreversible, where cleaning may not restore membrane permeability. Heavily fouled membranes are more challenging to clean as it becomes more difficult for the cleaning chemical to penetrate the membrane surface and flushing the foulants out of the membranes. Furthermore, the time between cleanings may become more frequent as the membranes which are not completely cleaned foul or scale more rapidly.

7.4 CIP Equipment

The equipment for CIP is shown in the CIP system flow diagram below Figure 20. The materials of construction for selected equipment and ancillaries of the CIP system should be compatible with the pH, chemical types and concentrations, and temperature of the CIP solutions.

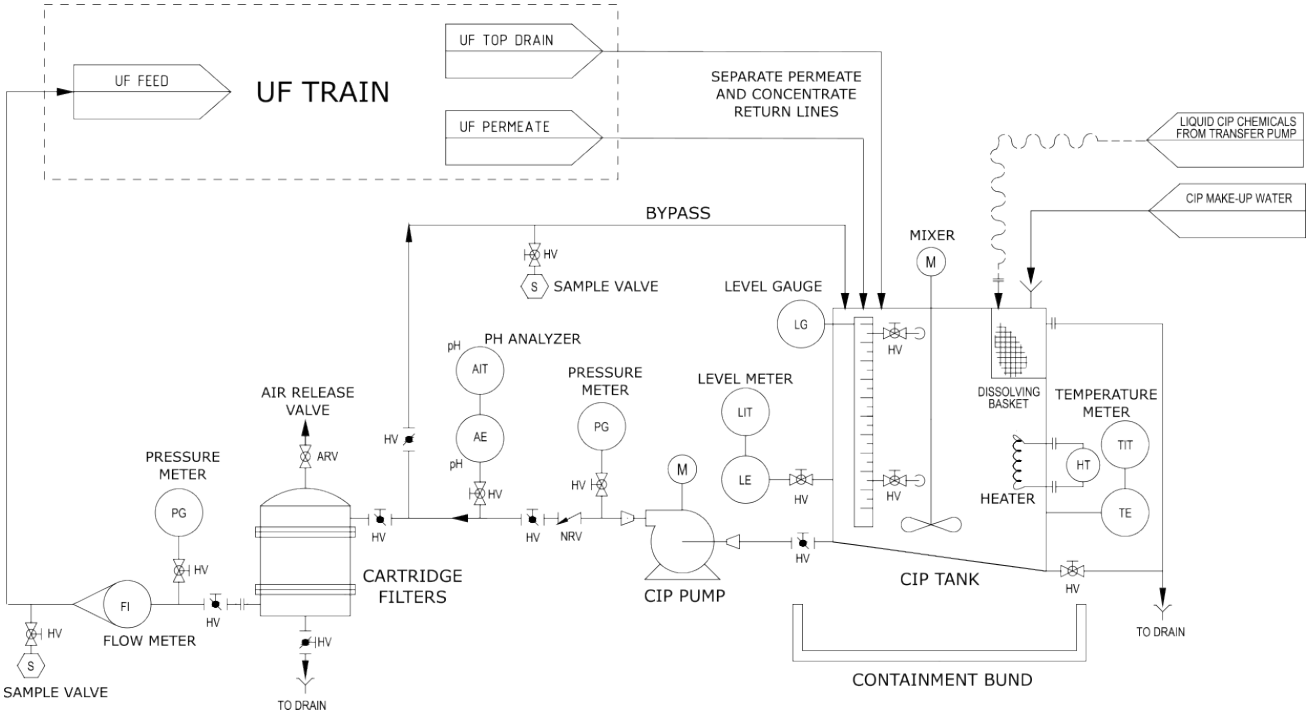

Figure 20: Recommended CIP setup

CIP TANK	Chemical Mixing Tank	Polyethylene, Polypropylene or FRP with cover and bottom slope
CIP PUMP	Low-Pressure Pump	316SS, or non-metallic composite
CIP Cartridge Filter	Polypropylene, 5 or 10 micron	PVC, FRP, or SS housing
HT	CIP Tank Heater (Optional)	
MIXER	Optional depending on tank geometry	
TIT	Temperature Transmitter	
LIT	Level Transmitter	
LG	Level Gauge	
PG	Pressure Gauge or Transmitter	
FI	Flow Meter or Transmitter	
AIT (ph)	pH Analyzer	
BYPASS	For mixing and flow control	

1. The CIP Tank may be constructed of polyethylene (PE), polypropylene (PP), or fiberglass-reinforced plastic (FRP). The tank should be provided with a removable cover and a design that allows complete drainage. The cleaning procedure is more effective when performed at an elevated temperature. The chemical solution should be maintained in accordance to the pH and temperature guidelines listed in Table 1. It is recommended to not use a cleaning temperature below 15°C (59°F), because of the slower chemical kinetics at low temperatures. Cooling after a heated CIP may also be required in certain geographic regions.

   A general rule of thumb used in sizing of the CIP Tank is to use the approximate volume of the MEV vessel and add the hold-up volume in the feed and return lines, within the boundaries of the UF system to be cleaned in one CIP event plus enough volume to maintain a Net Positive Suction Head (NPSH) for the CIP pump.

2. The CIP Pump should be sized for the flows and pressures given in Table 6, making allowances for pressure loss in the piping and across the CIP cartridge filter.

Table 8: Recommended CIP Feed Flowrate per UF module

UF Model	Feed Flowrate (per UF module) m³/h	Feed Pressure (at UF module)		
		gpm	bar	psi
DuPont™ IntegraTec XP 52 IC module	1.5	6.6	< 3.0	< 43.5

Appropriate valves, flow meters and pressure gauges should be installed to adequately control the flow. Service lines may be either hard-piped or use flexible hoses. In either case, the flow velocity should be maintained at 3 m/s (10 ft/s) or less.

3. Ensure that the CIP concentrate and filtrate return lines are submerged in the CIP Tank to minimize foaming.

7.5 CIP Procedure

The cleaning duration for each CIP solution is expected to require about 6 hours, depending on target recycle and soak durations, and actual time required to prepare chemicals and equipment. The permeability of the UF membranes to be cleaned should be measured with online instrumentation for before and after the CIP with each type of solution, to allow for baseline and assessment of chemical cleaning efficiency and indication of the type of fouling. Permeability (LMH/bar, or gfd/psi) may be measured on normalized terms using the DuPont Ultrafiltration Normalization Tool, or on approximate basis using field measured values of flow and pressure at the feed and filtrate.

Table 9 provides a general valve sequence table for the steps of the CIP procedure. A description of each step of the CIP procedure follows in this section.

Table 9: General Valve Sequence Table for CIP Procedure

Step No.	CIP Step 1	UF Feed Pump	UF Backwash Pump	UF Forward Flush Valve	CIP Pump	CIP Tank Heater	CIP Inlet Valve (Feed)	CIP Outlet Valve (Concentrate)	CIP Outlet Valve (Filtrate)	CIP Recycle Valve
1	Install CIP Cartridge Filter Elements	O	X	X	X	X	X	X	X	X
2	Make-up Cleaning Solution	O	X	X	O	O	X	X	X	O
3	Regular Backwash, Pre-CIP	X	O	O	O	O	X	X	X	O
4	Remove from Service	X	X	X	O	O	X	X	X	O
5	Drain	X	X	X	O	O	X	X	X	O
6	Low-flow Pumping	X	X	X	O	O	O	O	X	O
7	Recycle	X	X	X	O	O	O	O	O	O
8	Soak[2]	X	X	O[3]	X	X	X	X	X	X
9	Final Recycle	X	X	X	O	O	O	O	O	O
10	Flush Out	X	X	X	O	X	O	O	O	O
11	Regular Backwash, Post-CIP	X	O	O	X	X	X	X	X	X
12	Return to Service	O	X	X	X	X	X	X	X	X

Notes:
X – Valve Closed, or Equipment Off
O – Valve Open, or Equipment On
[1] Valve positions and equipment status are dependent on the previous step in the sequence. For example, during Regular Backwash, Pre-CIP (Step 3) the CIP Pump is not required to be On in the stand-alone step, however the CIP Pump continues to be On to allow for mixing of cleaning solution (Step 2) which occurs in-parallel.
[2] Valve sequence will differ if low-flow recirculation is practiced during extended soak duration. Refer to Section 7.6, CIP Tips.
[3] If intermittent air scour is practiced during Soak step, the Forward Flush Valve should be opened to allow venting of air introduced into UF modules. Elevation of system piping will help prevent drain out of CIP solution during this process.

4. **Install CIP cartridge filter** elements (5 or 10 µm rating).
5. **Make up cleaning solution.** Preheat cleaning solution to desired temperature, and meanwhile, open the CIP recycle valve to mix the solution with pump and/or agitator. For seawater applications, RO permeate is preferred for the UF CIP make-up solution; however, potable water or UF filtrate may be used if there is no alternative water source. Always add the chemical to the CIP make up water to avoid exothermic reactions.
6. **Regular backwash, pre-CIP.** Conduct a regular backwash of the UF train to remove loose contaminants prior to the CIP.
7. **Remove from Service.** Remove the UF train to be cleaned from service by normal shutdown procedures. Ensure manual and actuated valves are in correct position prior to the CIP.
8. **Drain out water in the UF vessels.** Residual water in UF train will dilute the concentration of cleaning solution. Therefore, drain the residual water by opening the forward flush outlet valve and backwash outlet valve, and close when the UF train are drained of standing water.
9. **Low-flow pumping.** After the UF train is drained of residual water, activate the CIP pump. Pump mixed, pre-heated cleaning solution through the feed side of the UF modules (i.e., filtrate valve closed) at conditions of low flowrate (about half of that shown in Table 6) and low pressure to displace remaining standing water and solids in the UF modules andMEV.
10. **Recycle.** Recycle the cleaning solution at the flowrates shown in Table 6. CIP solution continues to be introduced into the UF vessels from the feed side. Continue to recycle and allow the temperature to stabilize. Measure the pH of the solution and adjust the pH, if needed – e.g., if pH falls or increases by greater than 1 pH unit from target level. If NaOCl is included in the CIP solution, the recycled solution may also be measured for free chlorine using a portable colorimeter, where NaOCl chemical is replenished if the measured chlorine falls below 75% of target concentration. The recycle step typically lasts 1 hour, depending on extent of fouling. Initially, recycle only through the feed side of the module (i.e., filtrate valve closed) so that the solids accumulated on the membrane surface are flushed out of the system and not pushed back again into the membrane; after 15 – 20 minutes open as well the filtrate valve (while the concentrate/reject valve remains partially open) so that the chemical solution also flows through the fiber and filtrate piping back to the CIP tank (target 10 – 20% filtrate and 80 – 90% concentrate returns).
11. **Soak.** Deactivate the CIP Pump and CIP Tank Heater. Close the CIP inlet, outlet and return valves, and allow the modules to soak. The soak step is typically 2 hours, depending on extent of fouling; sometimes, an overnight soak of 10 – 15 hours is effective for recovery of severe fouling. To maintain a high temperature and to improve cleaning efficiency during an extended soak period, use a slow recirculation rate (about 10% of that shown in Table 11). We recommend intermittent air scour for a few seconds, every 30 minutes of the soak period, to agitate fibers for enhanced cleaning benefits; if intermittent air scour is practiced during soak step, the Forward Flush Valve should be opened to allow venting of air introduced into UF modules.
12. **Final Recycle.** Recycle the cleaning solution at the flowrates shown in Table 8: Recommended CIP Feed Flowrate per UF module CIP solution is again introduced into the UF modules from the feed side. The final recycle step typically lasts 20 – 30 minutes duration.
13. **Flush out.** After the final recycle period, drain the vessels and drain the CIP Tank. Fill the tank with RO permeate (preferred, for seawater applications), potable water, or UF filtrate to prepare for the Flush out step. RO permeate is preferred for seawater applications, to prevent reaction of impurities in the flush-out water with the remaining cleaning solution. Perform the Flush out of the CIP tank and piping by repeat of Low-flow pumping (Step 6) and Recycle (Step 7) for a period of 10 minutes. A plan for discharge of the chemical wastes in accordance to local regulations should be developed prior to performing the CIP.
14. **Regular backwash, post-CIP.** Conduct a regular backwash of the UF train to prepare the system for return to service.
15. **Return to Service.**

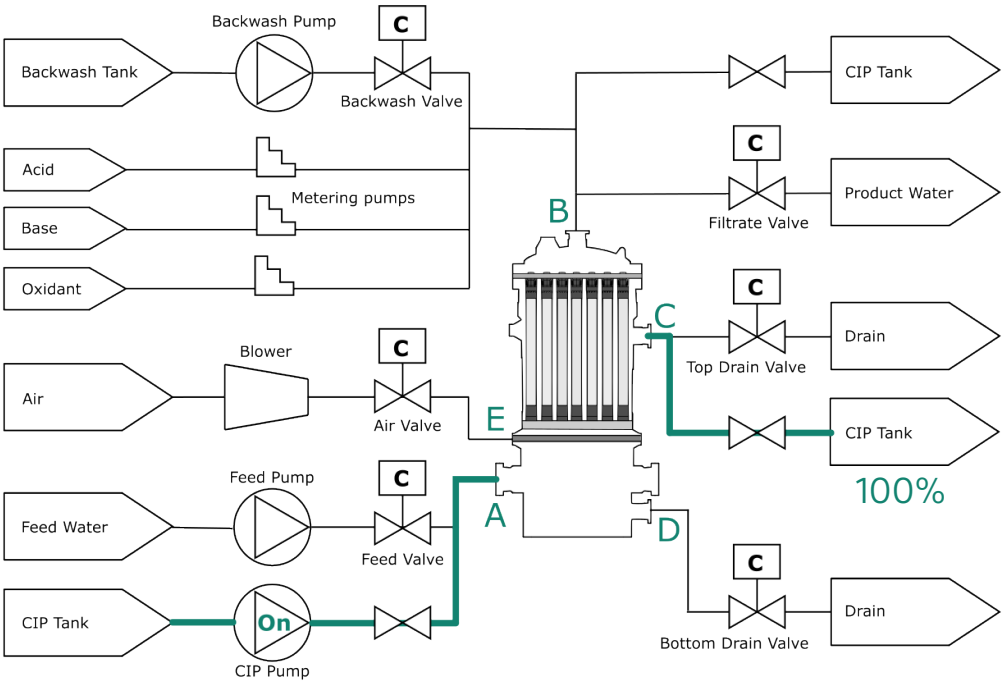

Figure 21: CIP with concentrate recirculation

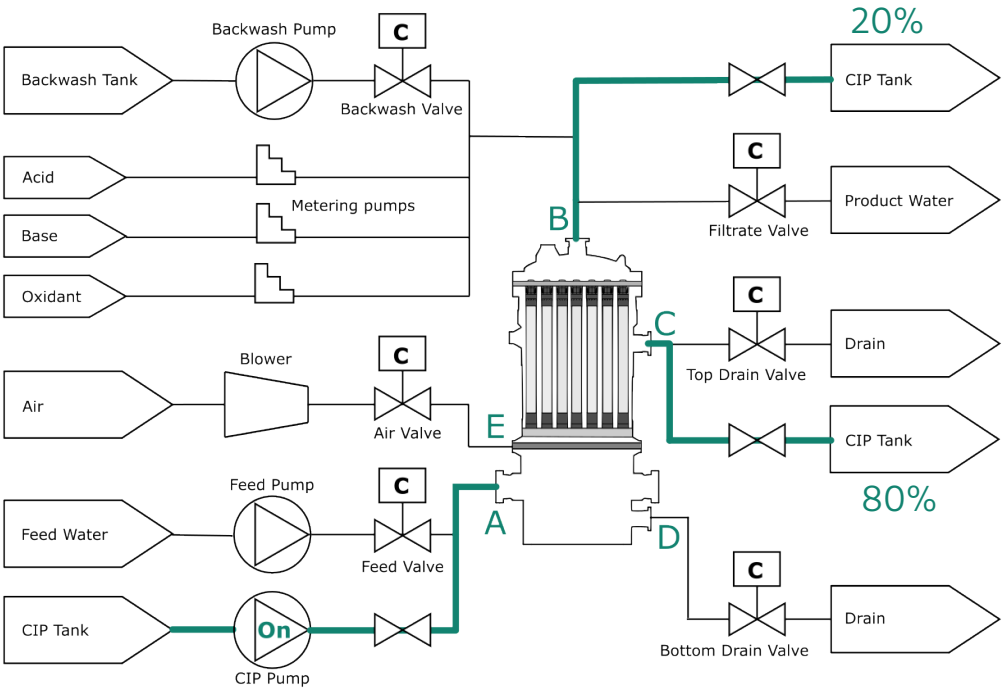

Figure 22: CIP with concentrate and permeate recirculation

7.6 CIP Tips

1 The fouling of membrane modules typically consists of a combination of fouling mechanisms, e.g., a mixture of organic fouling, colloidal fouling and biofouling, which often requires a two-step cleaning program: alkaline cleaning followed by acid cleaning. We recommend alkaline cleaning as the first cleaning step. Acid cleaning should only be applied as the first cleaning step if it is known that only calcium carbonate or iron hydroxide is present on the membrane surface. Acid cleaners typically react with silica, organics (e.g., humic acids), and biofilm present on the membrane surface, which may cause further decline of membrane performance if being introduced first.

2 Always measure the pH during cleaning. If the pH increases more than 1 pH units during acid cleaning, more acid needs to be added. If the pH decreases more than 1 pH units during alkaline cleaning, more caustic needs to be added.

3 Inspect the appearance of the spent CIP solution at various points during the recycle and soak steps. The visual appearance sometimes provides indication of the type of fouling, especially in the case of inorganic metals.

4 Long soak times. It is possible for the chemical cleaning solution to be fully saturated, which allows the foulants to precipitate back onto the fiber surface. In addition, the temperature will drop during this period; therefore, the soaking becomes less effective. It is recommended to circulate the solution regularly to maintain the temperature (temperature should not drop more than 5°C/41°F) and add chemicals if the pH needs to be adjusted.

5 Fresh cleaning solution needs to be prepared when the cleaning solution becomes turbid and/or discolored. The cleaning is repeated with a fresh cleaning solution.

6 Intermittent air scour immediately before the CIP (prior to Step 5, Drain out water in UF train), during, and just at the end of the soaking step (Step 8, Soak), can benefit the cleaning effectiveness in more challenging cases. It might occur that due to the aeration and depending on the system piping layout, some of the chemical solution volume is lost through the module top port; in this case the system must be refilled again with chemical solution using the CIP pump.

7 Thermal Shock should be considered in cold water environments, to prevent damage to UF modules and piping systems in cases where high-temperature CIP solution is introduced into low-temperature system (e.g., Step 6, Low-flow Pumping), or low-temperature flush water is introduced into a warm or heated system (e.g., Step 10, Flush Out). In this case it is recommended to recirculate the solution while it is being heated-up up for a gradual temperature increase. Similarly, at the end of the cleaning, it is recommended to let the system cool down before flushing it out (Step 10 of previous section) with cold water.

8 Use the least harsh cleaning solution possible, including cleaning parameters of pH, temperature, and solution strength.

7.7 CIP Chemicals

Table 10 lists general cleaning chemicals that are effective to recover membrane permeability in most situations. Generic acid cleaners and alkaline cleaners are standard, widely available cleaning chemicals. Acid cleaners are used to remove inorganic precipitates (e.g., including iron), while alkaline cleaners are used to remove organic fouling (e.g., biological matter). Specialty cleaning chemicals may be used in cases of severe fouling, or unique cleaning requirements. For seawater applications, RO permeate is preferred for the UF CIP make-up solution; in cases when RO permeate is not available, please discuss project-specific conditions of water quality with DWS Technical Service to evaluate if potable water or UF filtrate may be used as an alternative water source. Depending on the make-up solution water source, the feed water may be highly buffered (i.e, high alkalinity), where additional acid or base chemical may need to be added to reach the target pH level – which is pH 2 for acid cleans, and pH 12 for alkaline cleans. Also, a softener can be used on the CIP make up water system to remove hardness.

Table 10: General CIP Cleaning Solutions

Cleaning Solution **Targeted Foulants**	**Solution 1** **0.2% (W) HCl, at pH 2, 35°C (95°F) max.**	**Solution 2** **2% (W) Citric Acid at pH 2, 35°C (95°F) max.**	**Solution 3** **2% (W) Oxalic Acid at pH 2, 35°C (95°F) max.**	**Solution 4** **0.2% (W) NaOCl + 0.1% (W) NaOH, at pH 11.5, 35°C (95°F) max.**
Inorganic	Preferred	Alternative	Alternative	
Particulate / Colloidal	Preferred	Alternative	Alternative	Preferred
Microbial / Biological				Preferred
Organic				Preferred
Combined Metals and Organic Complexes		Preferred	Alternative	

Notes:
1. (W) denotes weight percent of active ingredient.
2. Solution 2 (Citric Acid) should be thoroughly flushed from system before return to service due to organics loading.

8 System design

The Ultrafiltration system design software is a powerful tool that allows to size new systems or evaluate the performance of existing ones. In order to design a new Ultrafiltration system, it is important to understand the main inputs needed to get an accurate and optimized design. These inputs include:

- Information about the feed water source (e.g., municipal, seawater, wastewater, well water or surface water)
- Quality (refer to Section 5 of this document)
- Temperature range
- Seasonal changes. If the UF feed water quality and temperature of the source water is subject to seasonal changes, details on the range of fluctuation are also required for the analysis (ideally in the form of a distribution, otherwise at least stating the minimum, maximum and median values). Other important information for surface waters (and for source waters affected by surface waters) includes the duration and impact of heavy rain and flooding events.
- Required feed flow or net plant output

On the other hand, the final application of the project is of interest, as in the case of drinking water applications, specific DuPont™ Ultrafiltration Module must be used.

For a given feed water type and quality, the appropriate design guidelines must be applied. These design guidelines have been created based on extensive experiences and references in similar waters. The design guidelines include suitable operating flux, duration of the filtration cycles or frequency of the chemical cleanings.

DuPont Water Solutions has designed Water Application Value Engine (WAVE) – a digital modelling tool that will save time and increase efficiency for evaluating components as well as designing water treatment systems. The WAVE design software allows engineers and original equipment manufacturers (OEM) to configure UF systems for a specific application. Once all the main inputs are introduced in the system design software, it will populate a detailed Ultrafiltration System Design report, which includes a general process flow diagram, UF module/Module selection, sizing and quantity of trains, sizing of water and chemical tanks, process parameters and sequence tables, as well as estimations for chemical and energy consumption, among others.

More information about WAVE can be found at www.dupont.com/water/

Avoiding errors in the design and construction of an UF system is fundamental to achieving smooth, trouble-free operation when the plant is completed. It also reduces the risk of damaging the membranes and Modules or suffering irreversible loss of performance. Proper compliance with the following guidelines is a key prerequisite for achieving a successful operation.

⚠ *CAUTION*	
⚠	Observe the following guidelines!

- The design and construction of any UF system should be based on state-of-the-art technology and in accordance with good engineering practices.
- The system should be specifically designed to avoid any pneumatic and/or hydraulic pressure surges or siphoning effects. All UF systems should include the following components and observe the following requirements:
    - The system should include a means of controlling the feed and backwash volume flow rates (e.g. using frequency-controlled pumps or control valves with PID controllers). For the backwash pump controller, it is important to ensure that the set point value for the volume flow is reached within 5 - 7 seconds (time depends on pump capacity and valve dimension).
    - The actuators of all (butterfly) valves should be equipped with air throttling valves to control the opening and closing procedure. Air/water hammer can occur if the valves open or close too abruptly.

- Air vent valves must be provided to vent the dead ends of the rack reject and filtrate headers to prevent pressure surges caused by air trapped in the dead end. Further air vent valves should be provided on all higher sections of the rack piping and connecting pipework.
- One-way air release valve must be used in the filtrate line. The use of combination vacuum valves/air release valves is recommended in the reject line to help during the draining step.
- The rinse water piping must be equipped with vacuum breakers (air intake valves).
- Vacuum generated during the draining step can be harmful to the pressure vessel and will cause significant delays to the backwash sequence. The design of piping and safety devices must ensure enough air can enter the vessel to prevent vacuum.
- The switching circuits of the pumps and valves must be designed to ensure that no pressure surges are produced in the system, e.g. the pumps and valves should be actuated in a controlled sequence at intervals of approximately one second so that pumps are never running against closed valves.
- Any change of operating mode that involves a switch between the feed and backwash pump, including the switching of the required valves (e.g. backwash to filtration) must include an idle interval of approx. 5 – 7 seconds between the completion of one operating mode and the activation of the subsequent operating mode.
- When designing and constructing an ultrafiltration system, it is important to ensure that there are no dead spaces, particularly on the filtrate side, which could promote microbial growth. For the same reason, it is essential that there is no direct connection between the feed and filtrate sides which could create a bypass between the two sides of the filtration process.
- When designing/constructing an ultrafiltration system, it is also important to ensure that no corrosion or erosion products from the feed tank, backwash tank or piping can be sent back into the Modules. For this reason, the tanks used for source water, filtrate/backwash and Clean In Place (CIP) must be made of noncorroding materials which will not release any contaminants or damaging (e.g. abrasive) substances into the water. The same applies to the piping and all other components installed within the ultrafiltration system.
- If the Chemical Enhanced Backwash maintenance cleaning is implemented, the dosing pumps must be designed and scaled to meet the concentrations and pH values required for CEBs.
- It is important to protect the water in the filtrate/BW tank and connecting pipework from direct sunlight and exposure to light in order to prevent excessive heating and avoid exposure to sunlight which could pose a risk of promoting bacterial and/or algae growth.
- Sealed filtrate/backwash tanks with air filters must be used to prevent microbiological contamination.
- We recommend providing different chemical dosing points for each chemical CEBs and for each train (= independent backwashable unit of several vessels). In addition, chemical dosing points for CEBs should be as close to the trains as possible. This offers numerous advantages:
    - Reduces the volume of water that must be replaced when dosing and rinsing, thereby reducing dosing time.
    - Avoids the mixing of different chemicals in the backwash piping which could otherwise occur if two CEBs were performed one immediately after the other for two different trains.
    - Reduces chemical consumption and provides higher recovery rates because less water is used.
    - Introduces fewer variables for the control system.
- Experience has shown that it is sensible to place the acid dosing unit furthest upstream in the system. Any precipitation that builds up on the other dosing units further downstream can then be removed by means of acid dosing. It is important to ensure that the chemicals are properly mixed into the flow of water (mixing devices should be used if required).

9 Operation

9.1 Instruments for System Operation

For a proper control and monitoring of the ultrafiltration system, the appropriate instruments must be put in place. Table 10 below shows the usual instruments required for the ultrafiltration system (provided by the equipment manufacturer). The data is typically logged by the plant SCADA system.

Table 11: Minimum instruments recommended in an Ultrafiltration system

Parameter	Feed	Filtrate	Backwash	CEB	CIP	Air Scour
Pressure	X	X	X	X	X	X
Flow		X	X	X	X	X
Temperature	X				X	
pH				X	X	
Turbidity	X	X				

For a detailed Process and Instrumentation Diagram of a typical UF system using DuPont UF Modules contact DuPont.

9.2 Manual Valve Positioning

The procedures in this section refer to several system valves which are automatically operated. Table 11 gives a summary of these valves.

Table 12: Valve position during normal operations

Valve Name	Off-Line	Stand By	Service
Service in flow control valve	Close	Close	Open
Top BW/FF drain valve	Close	Close	Open/Close
Bottom BW drain valve	Close	Close	Open/Close
Service outlet (filtrate) valve	Close	Close	Open
Air scour inlet valve	Close	Close	Open/Close
CIP inlet valve	Close	Close	Open/Close
CIP backwash valve	Close	Close	Open/Close
CIP filtrate valve	Close	Close	Open/Close

The positions of the valves during system operation are given in 0. In addition to the valve positions outlined in this table, during normal and emergency operations:

- All drain and vent valves should be closed.
- All instrument isolation valves should be open.
- All sample valves should be closed (unless samples are being collected).
- All CIP feed and return valves should be closed.
- All pressure regulating valves are throttled.
- Check valves require no positioning.

9.3 Initial Plant Start Up

This procedure is to be used when first placing the MEV system in operation, after a long-term shutdown, following extensive repairs, or under any circumstances where the system is not ready for a routine start.

9.3.1 Preliminary Checks

CAUTION	
	Before the initial start-up of the system, or start-up after maintenance, proper installation and operation of all equipment must be complete and the equipment must be ready for operation in accordance with the appropriate procedures.

Prior to initial start-up of the MEV unit, steps must be taken to ensure operability of all associated equipment. The operability of systems should be checked as follows:

- Make sure all electrical, water and chemical supplies are ready and associated safety measures closely followed as per equipment supplier's manuals and recommendations.
- Verify that all systems are properly installed and ready for operation. Systems to be checked include but are not limited to intake pumps, air compressor, DuPont MEV units, backwash pumps, backwash blowers, chemical addition system(s), and CIP systems. These checks must include but are not limited to:
    - Check that all equipment is installed as shown in drawings and documentation.
    - Check that all hydraulic connections to the system and within the system are complete and secure and that no equipment is locked out or tagged out.
    - Ensure that chemicals and mixing water are available for the chemical feed system(s), and that chemical solutions are fresh and ready for use during start-up.
    - Verify that all piping connections are complete as shown in P&IDs and are ready to receive water.
    - Verify that the feed water supply is available, and that the pipe connections for product and waste discharge are properly connected and ready to receive water.
    - Walk down the system, following the system flow path verifying all valves are in the proper 'service operation' positions. Never start the system without inspecting valve orientation.
    - Verify all lines are tight and check DuPont MEV system logbook for indication of plant condition.
    - Check all chemical tanks for sufficient supply of chemicals for operation.
    - Double check the set points for pressure and flow instruments.

Once the preliminary checks have been completed, the operator may proceed to the initial startup sequence. If all preliminary checks are not completed, the system may not operate properly.

9.3.2 Initial Start-Up Sequence

CAUTION	
	Preliminary checks for all the systems in the MEV unit should be performed before the initial start-up procedure is begun. These checks are summarized in Section 9.3.1.

WARNING	
	Prevent water hammer! DuPont MEV Vessel and Modules may be damaged, and warranty voided as a result of water hammer.

NOTE	
	Pumps can be started when the opening unit valves have left their seats and there is no valve close signal. Within a set time, the valves have to be fully opened, if not flushing should be stopped/hold and an alarm should be raised.

The initial start-up procedure for the DuPont MEV unit is as follows.

- **MEV vessel flushing**. Before installing the UF Modules, the MEV vessel should be flushed with feed water to remove any solid particles or foreign material from inside the vessel and pipes which could damage the UF Modules. Flushing should be done using the feed water pumps.

Once flushing of the MEV vessel is done, proceed with UF Module installation.

- **Modules flushing.** To control dehydration and biological growth, DuPont's ultrafiltration Modules are shipped wetted and preserved in a non-hazardous standard storage solution containing pH buffered 1 wt% food-grade SMBS. At initial plant start-up, the Modules must be flushed in order to remove any residual storage chemicals or air trapped during the Module installation. Therefore, flushing must be repeated once the Modules have been installed. This flush occurs on the outside of the fibers, i.e., no filtrate is produced.

  Once the initial flush is done, the plant can begin producing filtrate.

- When starting the initial filtration cycle the flow should be slowly increased before being put into operation at the design conditions.

NOTE	
	During the flushing steps, vent air from all sample taps, instrument panel vents, and piping discharge vents. Continue operating until all air is expelled from the DuPont MEV unit.

9.4 Routine Start Up

These instructions for routine start-up should be used when the system was shut down temporarily for repair or maintenance procedures or when the system has encountered a non-emergency alarm condition.

NOTE	
	Do not use this procedure after an extended shut down or if emergency shut down procedures were used. If either an emergency shutdown has occurred or if the unit was shut down for an extended period, use initial start-up procedures.

Prior to start-up, these preliminary checks should always be conducted:

- Check plant logbook for indication of plant condition.
- Walk down the system, following the flow path to verify that all valves are in the proper position for operation. Never start the system without inspecting valve orientation. Check that all equipment is operational.

CAUTION	
	Never operate the unit if any equipment is locked/tagged out.

- Check all hydraulic lines to and from the MEV unit for proper valve orientation, and to ensure that lines are tight.
- Check plant feed water lines for pressure (indicating that water is available).
- Check that sufficient chemicals are present in all feed systems to support operation. Ensure chemical solutions are fresh.

The routine start-up of the system will generally be automated, using the operator interface on the main control enclosure.

NOTE	
	Routine start-up sequence should initiate with a flushing step

NOTE	
	The MEV unit must be free of air, flushed of preservative solutions, and no major repairs should have been done on the system since the last shutdown

9.5 Normal Shutdown

Under normal conditions, the system may be shut down automatically by placing the system's switch into the OFF position. Systems that must be manually shut down should be shut down immediately as unit operations cease. The unit will not restart until a new start signal is received.

If the system will remain offline for more than one day, please refer to the handling and storage section for the appropriate element preservation procedures.

9.6 Emergency Shutdown

NOTE	
	In the event of an emergency requiring immediate shutdown of the system, the operator can depress any red “EMERGENCY STOP” pushbutton. Alternatively, the operator can turn off the main circuit breaker. This will cause all unit operations to cease immediately.

NOTE	
	Emergency shutdown does not ensure that all equipment is ready for start-up again.

NOTE	
	Emergency Shutdown should only be used in case of emergency.

9.7 Integrity Test

9.7.1 Introduction

DuPont™ IntegraTec™ UF membranes are considered to be an absolute barrier to most of suspended matter, particles and microorganisms (such as Crypstosporidium, Giardia or even viruses), producing a very high filtrate quality (typically with a SDI < 2.5 and Turbidity < 0.1 NTU).

However, occasionally, a seal or valve may leak or a fiber break during operation, resulting in a loss of integrity. Leaking seals or broken fibers could allow contaminants to pass to the filtrate side and compromise its quality. This is not generally detected by the measurement instruments located in the filtrate side, like turbidity meters, as they are not sensitive enough to detect small leaks.

Therefore, a specific test should be employed to detect and isolate vessels containing leaks, for subsequent repair. Direct Integrity Testing (as opposed to Indirect Integrity Testing, which are based on the monitoring of some parameters of the filtrate water quality, such us turbidity or particle count) represent the most accurate and reliable way of determining the integrity of a membrane filtration system and is able to detect even small breaches in the membranes.

The Pressure Decay Test (PDT) is an example of Direct Integrity Test. In the PDT, a pressure below the bubble point is applied to the membrane, and the subsequent loss in pressure is measured during several minutes (typically 5 – 10 minutes). An integral membrane will maintain the initial pressure or will show a very slow rate of decay (due to the normal air diffusion through the membrane).

This is based on the Bubble Point Theory. The bubble point of a membrane is referred as the threshold air pressure required to displace water from the membrane pores in a fully wetted membrane. Integrity breaches such as broken fibers or defects on its surface are detected when applying pressures below the bubble point.

The general practice is to carry out the Pressure Decay Test applying a minimum pressure able to detect breaches of 3 microns or less, corresponding to the conservative size of the Cryptosporidium oocyst. The corresponding test pressure is dependent on several factors, such as the intrinsic properties of the membrane fiber and module design, but typically 1 – 2 barg (14.5 – 30 psig) is applied.

In case of an integrity breach, a bubble formation will be observed during the PDT in the clear pipes located in the filtrate side of each Module. It is important to note that a small passage of air is normal due to air diffusion through the membrane. A real integrity breach would result in a significant continuous stream of bubbles, accompanied by boiling water like noise and vibration.

9.7.2 Physical Inspection of Modules

If routine direct integrity testing will be performed, it is recommended that the piping design include a transparent filtrate pipe section on each vessel. The transparent pipe will make it easy to identify modules having integrity issues during the direct integrity test. If large continuous bubbles combined with a failed pressure decay test occur, identify or mark these vessels. While the vessels are pressurized also inspect the clamps and couplers for leaks around gaskets and seals. A soapy water solution can be applied to detect these types of leaks.

9.7.3 Pressure Decay Direct Integrity Test Procedure

There are two types of membrane integrity testing. In the “Indirect” integrity test methods, a filtrate water quality parameter (e.g., turbidity or particle counts) is monitored to detect compromised membrane units. The advantage of the indirect test methods is that the membrane unit does not need to be taken off-line, and continuous monitoring provides real-time integrity indication. However, they are not as sensitive or accurate as the “Direct” integrity test methods. In the “Direct” integrity test methods, a physical test is applied to a membrane unit to detect leaks. Examples of “Direct” integrity test methods are the Pressure Decay Test, the Diffusive Air Flow Test, the Water Displacement Test, or the Seeding Test.

DuPont recommends the Pressure Decay Test in order to check the integrity of the ultrafiltration membranes, due to its simplicity and sensitivity. The test must be done off-line to the individual UF trains. For municipal/drinking water installations the frequency of testing is set by the local regulatory agency. Once a leak is detected, visual inspection through a transparent pipe is used to identify the leaking module.

The integrity test will be carried out manually on-demand or automatically. Testing is performed after the membrane vessel has been cleaned. A fouled membrane could hide some membrane defects.

The procedure for the Pressure Decay Test would be as follows:

1. Take the UF unit or train out of the filtration mode (they should be in clean condition to avoid foulants to interfere in the results). Isolate the train being tested from other train in the system. Close the feed and concentrate valves (refer to Figure 17 below). Open the filtrate valve to allow water flow through the transparent pipe.
2. Pressurize the train using oil free compressed air (note that a blower is not suitable for this purpose, consult DuPont for further details) from the air inlet valve, and slowly raise the air pressure to 1.5 bar (~20 psi). Do not exceed 2 bar (~30 psi). Note that a minimum of 1.25 bar (~18 psi) is required to detect a 3 micron resolution. Displaced water may flow through the filtrate side for approximately two minutes.
3. Close the air inlet valve. Allow the pressure to stabilize.
4. Hold the pressure for 5 minutes (unless duration is specified by the local regulatory agency) to determine whether there are leaks or broken fibers. While the pressure hold test is ongoing visually inspect the modules for leaks. If installed, look for large continuous bubbles in the transparent filtrate pipes.
5. The integrity test is successful if the pressure drop is ≤ 0.05 bar (~0.73 psi) for the 5minute test or the calculated value as determined by the EPA Membrane Filtration Guidance Manual (2005) for the specific system design.

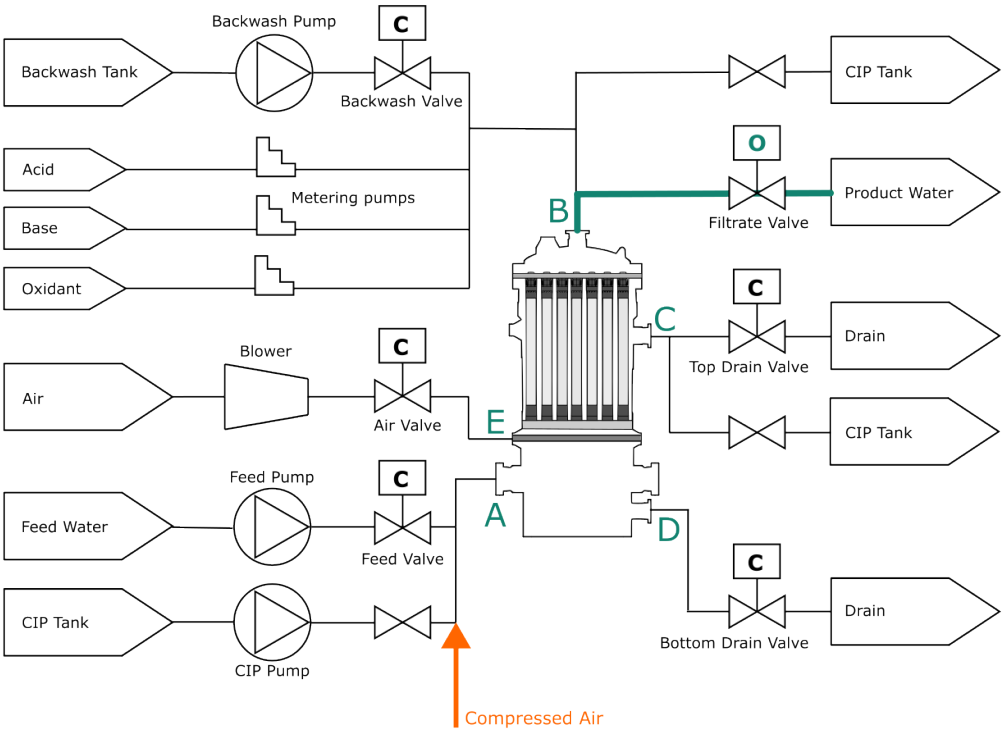

Figure 23: Pressure decay test diagram

Example of calculating pressure decay rate: Using an initial feed pressure of 1.5 bar (21.7 psi), an end feed pressure of 1.27 bar (18.4 psi), and test duration of 5 minutes results in a pressure decay rate of (see Equation 5):

$$\frac{(P_{t0} - P_{t5})}{5\ min} = \frac{1.50 - 1.27}{5} = 0.046\ bar/\min\ \ (0.66\ psi/min) \qquad \text{Eq. 5}$$

Since 0.046 < 0.05 bar/min, there are no leaks inside and the vessel passes the integrity test.

If the vessel exceeds the allowable pressure decay rate, the membrane might be compromised or leaking valves, gaskets, instruments, pipes, etc. may exist. Check for leaks or repair the modules and hollow fibers following the fiber test and repair procedure described below.

9.8 Record Keeping

In order to assess the performance of the Ultrafiltration system, it is important that all relevant data are manually recorded and collected on a daily basis (ideally once per shift) for each train independently of the data stored automatically by the plant data acquisition systems. This allows keeping track of the performance, establishing baseline performance, and confirmation of the readings of transmitters and gauges. Besides it is a valuable tool for troubleshooting and warranty claims.

The following list shows the minimum recommended measurements to be taken in an ultrafiltration system:

- Date and Time.
- Feed Water Temperature.
- Pre-Screen Inlet and Outlet Pressure.
- UF Feed Water and Filtrate Pressure (and concentrate pressure in case of Cross-Flow or Bleed-Mode operation). Take measurements before and after events such as Backwash or Chemical Cleanings in order to evaluate the effectiveness of the cleanings.
- Backwash interval.
- Filtrate Flow (and Cross-Flow or Bleed-Flow if applicable).
- Feed and Filtrate Turbidity.
- Feed and Filtrate SDI.
- Backwash flow (and calculate flux) and duration (including Air Scour, gravity drain, backwash top and backwash bottom, and forward flush steps).
- CEB frequency, duration, chemical concentrations used/pH, etc.
- CIP frequency, duration, chemical concentrations used/pH, etc.
- Calibration of all gauges and meters based on manufacturers' recommendations as to method and frequency.
- Any unusual incidents, for example, pretreatment upsets or feed water excursions, integrity failures, fiber repairs, shutdowns, etc.

Refer to Chapter 2 for details of the recommended water quality parameters to be monitored on a regular basis during the operation of the plant.

Examples of data logging sheets are shown in Table 13 below.

Table 13: Example of DuPont UF Operation Log Sheet

DuPont UF Data Log Sheet			
Customer:			
System Information: (pretreatment process, chemical feed type and dosages, etc):			
UF vessel model:	**Number of Trains:**	**Number of vessels/train:**	**Membrane Area:**
Date:	**Time:**	**Cumulative hours of operation:**	**Recorded By:**
Parameters	**Unit**	**Recorded Value**	**Comments**
Data Collected			
Temperature (T)	°C or °F		
Pre-filter Inlet Pressure	psi or bar		
Pre-filter Outlet Pressure	psi or bar		
UF Feed Pressure (P_f)	psi or bar		
UF Filtrate Pressure (P_p)	psi or bar		
UF Concentrate Pressure (P_c)	psi or bar		
UF Filtrate Flow / train (Q_p)	gpm or m^2/h		
UF Conc. Bleed Flow / train (Q_c)	gpm or m^2/h		
UF Backwash Flow / train (Q_{bw})	gpm or m^2/h		
UF Forward Flush / train (Q_{ff})	gpm or m^2/h		
Filtration time per cycle (t_f)	minutes		
Backwash time per cycle (t_{bw})	seconds		
Forward flush time per cycle (t_{ff})	seconds		
Air Scour time per cycle	seconds		
CEB Alkali frequency	hours		
CEB Alkali pH	---		
CEB Acid frequency	hours		
CEB Acid pH	---		
UF Feed Turbidity	NTU		
UF Filtrate Turbidity	NTU		
UF Feed TSS	ppm or mg/L		
UF Filtrate TSS	ppm or mg/L		
UF Filtrate SDI_{15}	%/min		
Performance			
Gross Flux (J)	L/(m²h) or gfd		
Transmembrane Pressure (TMP)	psi or bar		
Permeability ($L_{N,20}$)	gfd/psi or Lmh/bar		
Equations to Calculate Performance			
Transmembrane Pressure (TMP) = P_f - P_p			
Recovery (R) = (Q_p* t_f - Q_{bw}* t_{bw}) / (Q_p* t_f + Q_{ff} * t_{ff}) * 100			

Table 14: Example of DuPont UF CIP Log Sheet

DuPont UF CIP Record Sheet				
Customer:				
System Information: (pretreatment process, chemical feed type and dosages, etc.)				
UF vessel model:	**Number of trains:**	**Number of vessels/train:**	**Cumulative hours of operation:**	**Total number of cleaning:**
Date:	**Time:**	**Cumulative hours of operation after last cleaning:**		**Recorded By:**
Item	**Unit**	**First Solution**	**Second Solution**	**Remarks**
Pre-cleaning Air Scour and Backwash				
Backwash Water Source	---			
Backwash Flux	L/(m²h) or gfd			
Air flowrate per module	Nm³/h or scfm			
Cleaning Chemicals				
Volume of cleaning solution	L or US gal			
Acid (also list type used)	L or US gal			
Caustic soda (%)	L or US gal			
Sodium hypochlorite (%)	L or US gal			
Other Chemicals	L or US gal			
CIP Operating Conditions				
Solution concentration	%			
pH	---			
Temperature	°C or °F			
Circulation flowrate	m³/h or gpm			
Duration of initial circulation	minutes			
Soaking period	minutes			
Duration of final circulation	minutes			
Final Backwash and Flush/Rinse				
Source of water	---			
Flowrate	m³/h or gpm			
Duration	minutes			
pH of waste streams	---			

9.9 Data Normalization

9.9.1 Introduction

The temperature of the feed water affects the permeability of a membrane filtration system. At lower temperatures water becomes increasingly viscous (approximately 3% for every Celsius degree); therefore, lower temperatures require increasing the transmembrane pressure (TMP) to maintain a constant flux or reduce the flux through the membrane at constant TMP, as the resistance through the membrane increases. Consequently, this viscosity effect should be considered in the facility design to ensure adequate production capacity in all scenarios and understand the impact to energy consumption.

The term “Normalization” is an industry practice for correcting variations that would otherwise appear as a filtrate flux or TMP change, and lead to misinterpretations of the membrane process performance (e.g., a decrease in membrane permeability (i.e., flux divided by TMP) that would mistakenly be interpreted as a result of a fouling phenomenon, when it is only due to a decrease in water temperature). The technical basis for Normalization is provided in the ASTM D5090 standard, however, membrane manufacturers modify these formulas to allow better calibration and fit to the membrane characteristics of their product as demonstrated in fiber construction and field operating performance.

The basic idea of the Normalization practice is to eliminate the temperature effect from the operational data, so that any deviation in membrane performance at same operating conditions (e.g., same feed water quality, filtration cycle duration,

same backwash and chemical washes frequency, etc.) can be related to fouling phenomena. DuPont UF uses 25°C as temperature of reference for data Normalization.

9.9.2 Normalization of Performance Data

DuPont uses a viscosity-temperature correction factor based on the latest expression for the viscosity of liquid water from the International Association for the Properties of Water and Steam (IAPWS, www.iapws.org/relguide/LiquidWater.html).

The Temperature Correction Factor (TCF) follows Equation 2:

$$TCF = \frac{890}{\left(280.68 \cdot \left(\frac{T_K}{300}\right)^{-1.9}\right) + \left(511.45 \cdot \left(\frac{T_K}{300}\right)^{-7.7}\right) + \left(61.131 \cdot \left(\frac{T_K}{300}\right)^{-19.6}\right) + \left(0.45903 \cdot \left(\frac{T_K}{300}\right)^{-40}\right)} \qquad \text{Eq. 2}$$

Where:

TCF: Temperature Correction Factor, dimensionless.

T_K : Temperature in Kelvin degrees (i.e., °C + 273.15).

The numerator is the dynamic viscosity of water at 25°C in µPa· s, the denominator is the viscosity of water at the actual operating temperature. This expression results in a TCF of 1 at 25°C.

Table 15 shows the different values of the TCF from 0 – 40°C (32 – 104°F) at 5°C increments, based on Equation 2 above:

Table 15: Temperature vs TCF

Temperature (°C)	Temperature (°F)	TCF
0	32	0.50
5	41	0.59
10	50	0.68
15	59	0.78
20	68	0.89
25	77	1.00
30	86	1.12
35	95	1.24
40	104	1.36

And **Error! Reference source not found.** depicts TCF values versus Temperature

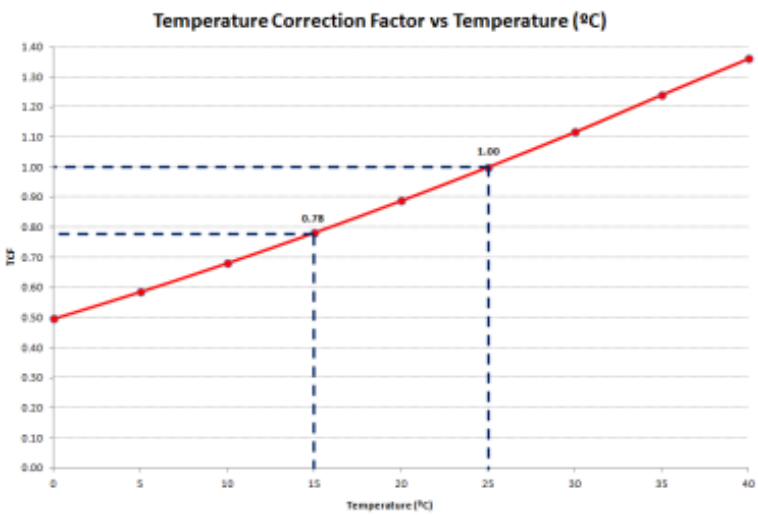

Figure 24: TCF vs Temperature (°C)

The formulas to calculate Normalized TMP and Normalized permeability are shown in Equations 3 and 4:

Normalized TMP = Actual TMP x TCF Eq. 3

Normalized Permeability = Actual Permeability / TCF Eq. 4

(Permeability is defined as operating Flux L/(m²h) divided by TMP (bar), with units of L/(m²hbar).

As an example to illustrate the importance of data Normalization, let us consider two hypothetical scenarios of UF plant performance:

Scenario 1: Winter	**Scenario 2: Summer**
Operating Flux: 65 Lmh Temperature: 15°C Temperature Correction Factor (as table and graph above): 0.78 Actual (measured) TMP = 0.40 bar Actual Permeability = 65 / 0.40 = 162.5 Lmh/bar Normalized Permeability (as per Eq. 3 above) = 162.5 / 0.78 = 208.3 Lmh/bar	Operating Flux: 65 Lmh Temperature: 25°C Temperature Correction Factor (as table and graph above): 1.00 Actual (measured) TMP = 0.35 bar Actual Permeability = 65 / 0.35 = 185.7 Lmh/bar Normalized Permeability (as per Eq. 3 above) = 185.7 / 1.00 = 185.7 LMH/bar

In this example it can be seen that it we look only at the actual values, in summer we seem to have a more favorable scenario, with lower TMP (0.35 vs. 0.40) and higher membrane permeability compared to winter (185.7 vs. 162.5 Lmh/bar). However, if we apply the temperature correction factors, the normalized permeability in summer is actually lower than in winter (185.7 vs. 208.3), which might be an indication of a more fouled membrane, a fact which would have been overlooked had we not considered temperature normalization.

Therefore, data Normalization is a very important tool to assess UF performance, as it allows studying trends of TMP and membrane permeability without the distortion of the temperature effect, so that fouling episodes can be anticipated, and the operating parameters and cleaning activities can be adjusted accordingly.

9.9.3 DuPont Ultrafiltration Normalization Tool

The DuPont Ultrafiltration Normalization tool is an Excel or web based tool that allows the plant operator to enter the operating parameters to automatically calculate the normalized values based on the formulas described above. General plant information are the inputs to be filled by the plant operator, which includes parameters like water temperature, UF feed pressure, UF filtrate pressure, flows or feed water quality.

The tool calculates the Temperature Correction Factor, as well as the Normalized TMP and the Normalized Permeability as described above, and automatically populates the following graphs:

- Normalized Permeability vs. Date
- Normalized TMP vs. Date
- UF Feed and UF filtrate Turbidity vs. Date
- UF Feed and UF filtrate SDI vs. Date

10 Handling and Storage Guidelines

This chapter provides general information for the handling and storage of Modules. The information in this bulletin applies to the DuPont™ IntegraTec™ XP 52 IC modules.

DuPont Water Solutions (DWS) recommends that the procedures for long-term shutdown & storage, in particular, be closely coordinated with local DWS technical service to facilitate a positive experience, and to train facility operations & engineering staff

10.1 General

Modules should be handled in such a way to help control the spread of and reduce bio-growth during long-term storage, shipping or system shutdowns. DWS recommends that the modules be shipped and stored in their original factory packaging and loaded into the system vessels just prior to start-up. There are cases when the customer may prefer to install the modules onto the vessels with significant time before start-up and commissioning; storage guidelines for these cases are also addressed in this chapter. If the module is exposed to air for an extended period of time, the membrane may become dry and at risk to irreversible damage; therefore, it is important to keep the membrane wetted.

10.2 Factory Storage & Shipping of Modules

As part of the quality assurance program, all Modules are tested for integrity and performance ("wet tested") at the factory, prior to packaging and shipment. To control dehydration and biological growth, Modules are shipped wetted and preserved in a non-hazardous standard storage solution containing pH buffered 1 wt% food-grade SMBS. The storage solution inhibits biological growth during storage and shipping of the modules. SDS for these chemicals are available from DWS.

Preservative solution is automatically delivered into the module housings prior to sealing of the module's feed and outlet ports by blinds at the grooved couplings and plug at the threaded air connection. The approximate volume of standard storage solution used at shipping for each IntegraTec™ XP IC52 module is 4 L (1 gal). If glycerin is added for freeze protection the holdup module volume will be used. After adding preservative and sealing the openings, the modules are wrapped in plastic bags prior to boxing for dust protection. Precise solution volume and good sealing of the couplings help ensure a stable preservative environment during transportation and storage of new modules.

The wrapped modules are stored in cardboard boxes, with one module per box. A small box containing installation parts is inserted into each cardboard box shipped. Saddle-shaped cushion inserts are located at both ends and along the module to support and protect the modules from damage during shipping and handling. The modules are stored in the horizontal position, with the sealed port connections facing upwards. Labels to identify the port locations and position the boxes are provided on the exterior of the packaging to allow proper storage. To prevent collapse of the boxed modules, stacking is limited to four layers for all products. Depending on the total number of modules and required shipping method, the boxed modules are either palleted or crated for transportation.

Modules must be protected from freezing or excessive heat during shipping and storage. The temperature limits for modules during standard shipping and storage are 1°C (33.8°F) to 40°C (104°F). Avoid abrupt variations in temperature; equalization should be allowed to occur at a maximum temperature differential of ± 1°C (1.8°F) per minute. Irreversible damage to the membrane and damage of the module components may result if the modules are exposed to temperatures outside these limits. If freezing conditions are anticipated during the customer's shipping and storage of modules, please notify DWS at the time of order placement. Glycerine can be added to the storage solution by DWS at the factory prior to shipping to protect the modules under freezing conditions.

Mechanical damage to module housing, membrane, and connections may result if the module, boxed module, pallet, or crate is dropped, and otherwise miss-handled. The modules should be handled with care, with particular attention during transportation.

10.3 Storage of New Modules

Modules are recommended to be shipped and stored in their original packaging separate from the system vessels and loaded into the system just prior to start-up. There may be cases where the customer prefers to pre-install the modules on the system vessels; for example, to allow factory acceptance testing of packaged or mobile systems prior to shipping, or work scheduling at site to eliminate the separate step for module loading. In cases where pre-installation of modules onto the system vessels are preferred for alignment of process/mechanical piping, frame and supports, blank or "dummy" modules are available from DW&PS to assist in alignment and shipping of system vessels from the customer's facility to the project site. It is recommended that seals and plugs for isolation and storage solution containment be saved for future use.

These guidelines should be followed for storage of new Modules:

- Keep modules in original factory packaging. There are cases when the customer may prefer to load the modules into the vessels with prior to start-up & commissioning; guidelines for storage of modules installed in-vessel are provided in the Sections 9.4 and 9.5, Short-Term and Long-Term Shutdown & Storage of Used Modules.
- To minimize the potential for leakage of preservative, modules should be stored in horizontal position, with the sealed port connections facing upwards. Labels of the port locations are provided on the exterior of the box to facilitate storage. If leakage is observed, please refer to guidelines for replenishment of storage solution provided in the Sections 9.4 and 9.5, Short-Term and Long-Term Shutdown & Storage of Used Modules.
- To prevent collapse of the boxed modules, limit vertical stacking to four layers for modules.
- Store inside a cool and dry building or warehouse, away from sources of heat, ignition, and direct sunlight. An ambient temperature of 20°C (68°F) to 35°C (95°F) is recommended for ideal storage conditions.
- Temperature limits for modules during shipping and storage is 1°C (33.8°F) to 40°C (104°F). Modules must be protected from freezing or excessive heat during shipping and storage. Avoid abrupt variations in temperature; equalization should be allowed to occur at a maximum temperature differential of ± 1°C (1.8°F) per minute. If freezing conditions are anticipated during the customer's shipping and storage of modules, please notify DW&PS at the time of order placement. Glycerin may be added to the storage solution by DW&PS at the factory prior to shipping to allow for shipment and storage at freezing conditions.
- Sealed modules may be stored up to 18 months from date of manufacture, at the recommended storage conditions in the original packaging, without additional measures required for storage. If storage exceeds 18 months from date of manufacture, guidelines for confirmation and replenishment of storage are provided in Section 9.5, Long-Term Shutdown & Storage of Used Modules.

10.4 Short-Term Shutdown & Storage of Used Modules

This section provides guidelines for the short-term shutdown & storage of used (installed and operated) Modules and addresses cases where the modules are either (a) stored off-vessel as individual modules, or (b) stored on-vessel. Short-term is considered as periods where the modules have been drained or used in-service and will remain out of operation for less than 4 days.

Note that the quantities of storage solution required for on-vessel storage is greater than for off-vessel storage to allow for complete wetting of fibers; off-vessel storage allows for horizontal storage which decreases the amount of required solution.

If the modules are expected to be exposed to freezing conditions, glycerin should be added to the storage solution for either short- or long-term shutdown & storage conditions. Refer to Section 9.6, Freeze-Protection of Used Modules

10.4.1 Short-Term Shutdown & Storage, Off-Vessel Storage

For cases of short-term shutdown & storage, where the modules will be stored off-vessel, and the modules will be placed in service within the next 4 days, SMBS storage solution is not required. Clean water alone is sufficient to keep the fibers in wetted condition to avoid dehydration. Clean water sources may be from potable water or RO permeate. The approximate volume of water required for each IntegraTec™ XP IC 52 module is 4 L (1 gal).

If the modules have been in-service, a normal system chemical enhanced backwash (CEB) of alkaline, followed by acid, should be conducted before removal of the modules for short-term shutdown & storage. If CEB facilities are not available, then a normal backwash consisting of water and air scour steps should be conducted prior to removal of modules off the vessel.

Once the modules are removed water may be fed into the module through the feed port by gravity or low-rate pumping. Once the water is added into the module, all connections should be sealed tightly to retain the solution inside the module. To minimize the potential for leakage of preservative, modules should be stored in the horizontal position. Modules may be kept in the original cardboard boxes.

10.4.2 Short-Term Shutdown & Storage, Off-Vessel Storage

For cases of short-term shutdown & storage, where the modules will be kept inside the vessel, and the modules will be placed in service within the next 4 days, clean water alone is sufficient to keep the fibers in wetted condition to avoid dehydration. As for off-vessel storage, clean water sources from potable water or RO permeate should be used. The volume of water must be enough to fill the vessel and keep the modules fully submerged.

If the modules have been in-service, a normal system CEB of alkaline, followed by acid, should be conducted on the modules before short-term shutdown & storage. If CEB facilities are not available, then a normal backwash consisting of water and air scour steps should be initiated prior to short-term shutdown & storage.

DWS recommends that the UF CIP system be used for delivery of the water into the modules from the feed side. Refer to section 7.5 in this document for general procedure.

10.5 Long-Term Shutdown & Storage of Used Modules

This section provides guidelines for the long-term shutdown & storage of used Modules and addresses cases where the modules are either (a) stored off-vessel as individual modules, or (b) stored on-vessel. Long-term is considered as periods where the modules have been drained or used in-service and will remain out of operation for more than 4 days.

Note that the quantities of storage solution required for on-vessel storage is greater than for off-vessel storage to allow for complete wetting of fibers; off-vessel storage allows for horizontal storage which decreases the amount of required solution.

Re-preserved elements should be visually inspected for biological growth every three months. If the storage solution is not clear, the module should be re-preserved and re-packed as described above. Contact of the SMBS solution with air / oxygen will oxidize bisulfite to sulfuric acid. Therefore, the pH of the solution should be spot checked on random modules every 3 months. Re-storage is required when the measured pH is 3 or lower. For medium to large orders, to avoid inspection of every module, a representative sampling of the total number of modules (e.g. 5%) may be inspected for visual appearance and pH.

If the modules are expected to be exposed to freezing conditions, glycerin should be added to the storage solution for either short- or long-term shutdown & storage conditions. Refer to Section 9.6, Freeze-Protection of Used Modules.

10.5.1 Long-Term Shutdown & Storage, Off-Vessel Storage

For cases of long-term shutdown & storage, where the modules will be stored off-vessel, and the modules will remain out-of-service for more than 4 days, a storage solution containing pH buffered 1 wt% food-grade SMBS is required to effectively minimize biological growth in the modules during the storage period.

If the modules have been in-service, a normal system CEB and CIP should be conducted on the modules before removal of the modules for long-term shutdown & storage. Refer to Section 7.5 in this document for CIP Procedure. If CEB and/or CIP facilities are not available, then a normal backwash consisting of water and air scour steps should be initiated prior to removal of modules off the vessel.

The approximate volume of storage solution required for each IntegraTec™ XP IC 52 module is 4 L (1 gal) . For every liter of solution required, 12 grams of food-grade SMBS are added for biostatic protection, and 8 grams of sodium hydroxide and 27 grams of citric acid for pH buffer (quantities refer to active ingredient). Scale-up the preservative formulation to prepare the required volumes of storage solution for number and type of modules to be preserved.

Once the modules are removed water may be fed into the module through the feed port by gravity or low-rate pumping. Once the water is added into the module, all connections should be sealed tightly to retain the solution inside the module. To minimize the potential for leakage of preservative, modules should be stored in the horizontal position. Modules may be kept in the original cardboard boxes.

10.5.2 Long-Term Shutdown & Storage, On-Vessel Storage

For cases of long-term shutdown & storage, where the modules will be stored inside the vessel, and the modules will remain out-of-service for more than 4 days, a storage solution containing pH buffered 1 wt% food-grade SMBS is required to effectively minimize biological growth in the modules during the storage period.

Similar to off-vessel storage, if the modules have been in-service, a normal system CEB and CIP should be conducted before removal of the modules for long-term shutdown & storage. If CEB and/or CIP facilities are not available, then a normal backwash consisting of water and air scour steps should be initiated prior to removal of modules off the vessels.

The volume of solution must be enough to fill the vessel and keep the modules fully submerged. For every liter of solution required, 12 grams of food-grade SMBS are added for biostatic protection, 8 grams of sodium hydroxide and 27 grams of citric acid for pH buffer (quantities refer to active ingredient). Scale-up as required during the solution preparation procedure to prepare the required quantities of storage solution for number and type of modules to be preserved.

DWS recommends that the UF CIP system be used for delivery of the storage solution into the modules from the feed side. Refer to Section 7.5 in this document for CIP general procedure.

10.6 Freeze-Protection of Used Modules

Modules must be protected from freezing during storage. The temperature limits for modules during storage is 1°C (33.8°F), minimum. Irreversible damage to the membrane and damage of the module components may result if the modules are exposed to temperatures below this limit.

If the modules are expected to be exposed to freezing conditions, glycerin should be added to the storage solution for either short- or long-term shutdown & storage conditions. For cases when freezing is expected and notified to DWS, glycerin is added to the storage solution by DWS at the factory prior to shipping to allow for shipment and storage at freezing conditions. For re-storage by customer, food-grade glycerin should be applied to the storage solution, at the target strengths detailed in Table 16:

Table 16: Summary of the target glycerin strengths

Glycerin (wt%)	Viscosity (cP)	Freezing Point Depression (°C)	Freezing Point Depression (°F)
0.5	1.011	0.07	0.13
3.0	1.074	0.63	1.13
5.0	1.127	1.08	1.94
9.0	1.256	2.06	3.71
12.0	1.365	2.88	5.18
14.0	1.445	3.47	6.25
16.0	1.533	4.09	7.36
20.0	1.737	5.46	9.83
24.0	1.988	7.01	12.62
28.0	2.279	8.77	15.79
32.0	2.637	10.74	19.33
36.0	3.088	12.96	23.33
40.0	3.653	15.50	27.90
44.0	4.443	17.73	31.91
48.0	5.413	20.39	36.70
52.0	6.666	23.22	41.80
56.0	8.349	26.23	47.21
60.0	10.681	29.41	52.94

10.7 Re-Wetting of Dried Out Modules

Modules that have dried out membranes due to improper storage may irreversibly lose water permeability. Re-wetting may be successful with one of the following methods to be performed with each module individually, outside of the MEV vessel.

1. Soak modules in 50/50% ethanol/water or propanol/water for 15 minutes.
2. Soak modules in 1% HCl or 4% HNO_3 solution for 24 hours. During fill of the module, ensure that the module is in a vertical position to allow the escape of entrapped air.

11 Troubleshooting

CAUTION	
	This is a pressurized system. Relieve the pressure before starting maintenance. Disconnect the air from the valves! Just closing the valve will not relieve the pressure.

The following section (see Table 18) lists the major issues that may occur during the operation of the UF system, the most likely cause, and the typical approach to solve it.

Table 17: DuPont UF System Troubleshooting Guide

Symptom	Possible cause	Solution
Transmembrane pressure (TMP) high	Modules are fouled	Identify the foulant. Follow the appropriate cleaning procedure as per DuPont Guidelines.
	Flux/Flow too high	Reduce flowrate.
	Improper BW/CEB/CIP programs	Adjust operating conditions (contact DuPont in case of doubt). Refer to Section **Error! Reference source not found.** in this document.
	Feed temperature low	Adjust feed water temperature / Reduce operating flux.
	Change in feed water conditions	Check feed water analysis and pretreatment for abnormal changes. Refer to 5 in this document.
	Poor quality of chemicals, inefficient chemical cleanings	Evaluate the quality of the CEB/CIP chemicals. Consider using soft water for CIP solution makeup.
	Membrane drying	Contact DuPont.
	Pressure instrument malfunction	Keep instruments calibrated.
	Damaged air distribution header	Check if the air scour is well distributed across the vessel cross section (refer to the vessel manual)
Pressure drop across the strainer high	Dirty or fouled strainer	Clean the strainer.
Product flow low	Modules are fouled	Identify the foulant. Follow the appropriate cleaning procedure as per DuPont Guidelines. Refer to Section 6 in this document.
	Abnormal valve open degree	Check the status and open degree of valves
	Flow instruments malfunction	Keep instruments calibrated.
	Feed water pressure low	Diagnose and solve the problem.
	Filtered outlet line restricted	Examine the filtered outlet line for obstruction or a close valve.
	Feed temperature low	Adjust feed water temperature / Increase flow.
	Damaged air distribution header	Check if the air scour is well distributed across the vessel cross section (refer to the vessel manual)
Inlet pressure low	Insufficient feed water pressure	Increase the feed pressure, open the inlet/feed valve and check for restrictions.
	Solenoid valve not opening	Clean or replace the solenoid valve. Clean air line for adequate pressure. Check regulator for correct operation and setting.

Symptom	Possible cause	Solution
Backwash flow rate low	Backwash line restricted	Examine the backwash line for obstructions or a closed valve.
	Flow meter malfunction	Check the flow rate manually with a stopwatch and calibrated container. Note: Backwash tank can be used for this purpose.
	Restricted flow after pump outlet	Check for blockage of the backwash flow at the inlets and outlets of the membrane housings. Check for blockage at the pump discharge.
Backwash pressure high	Flux/Flow too high	Reduce flowrate.
	Backwash Outlet lines plugged	Examine the backwash outline for obstructions or closed valves. Disassemble the plumbing and remove foreign particles.
Air scour pressure low	Air leaks from exhaust	Damaged O-rings. Damaged diaphragms
	Air leaks from blower	Tighten bolt to correct torque. Install / replace O-ring.
	Obstruction in air line	Clear obstruction. Remove foreign matter. Check air inlet pipe plugs.
	Low flow	Worn impellers. Check inlet and discharge pressure and compare values with vendor specifications Check piping, valves and silencer to ensure an open flow path. Inlet filter plugged.
System cannot start In Auto status	High TMP	Refer to high TMP Symptom above.
	PLC problem	Check PLC
	Tank Level low	Check tank level and level transmitters
CIP Filter pressure drop high	Too high flowrate	Reduce flowrate through filters
	Approaching filter retention capacity. Foulant is being removed from the membranes.	Replace filter. Check chemical solution and replace if necessary. Refer to Section 6 in this document.
CIP level low	Liquid level is at or below low low set point	Bring the CIP tank level above the LAL set point by filling the tank with the cleanest available water.
	Level instrument malfunction	Check instruments against reference standards and replace as necessary.
CIP flow rate low	CIP line restricted	Examine the CIP line for obstructions or a closed valve.
	Flow meter malfunction	Check the flow rate manually with a stopwatch and calibrated container. Note: CIP tank can be used for this purpose.
	Restricted flow after pump outlet	Check for blockage of the CIP flow at the inlets and outlets of the membrane housings. Check for blockage at the pump discharge.
CIP pressure low	Low flow rates	Scarce CIP flow may indicate improper membrane cleaning.
	CIP Outlet lines plugged	Examine the CIP outline for obstructions or closed valves

12 Fiber repair

12.1 Equipment

The following items are needed to complete the fiber repair and integrity test procedure of DuPont™ IntegraTec™ XP 52 IC Module:

- AIT (Air Integrity Test) rack (Sourced from DuPont);
- Air supply apparatus (Sourced from DuPont);
- Water Supply apparatus (Sourced from DuPont);
- Brine seals and clamp (Sourced from DuPont);
- Fiber repair essential (include pins and glue, Sourced from DuPont);
- Water and compressed air supply (Prepared by User);
- Personal protection equipment (gloves, safety glasses, etc., Prepared by User)
- Tools (adjustable wrench, scissors, etc. Prepared by User)

Figure 25: Materials and Tools of IC-50 fiber repair

Table 18: List of Materials and tools Supplied by DuPont

No.	Name of material	GMID	Parts included	Module	Qty.	Unit
1	XP 52 IC fiber repair kit I– Water supply apparatus	12026969	Feed cap	XP 52 IC	2	EA
			Feed cap wrench	XP 52 IC, 600mm	1	EA
			Filtrate cap wrench	XP 52 IC, 500mm	1	EA
2	XP 52 IC fiber repair kit II -Air supply apparatus	12026971	Pressure reducing valve	0~6.0bar	1	EA
			Pressure gauge	0~0.4MPa	1	EA
			Ball valve	G1/4"	2	EA
			Quick connector	G1/4" -Ø8mm	4	EA
			PU tube	Ø8mm	9	Meter
			Triton	G1/4"	2	EA
			Plastic coupling set	DN50	2	Set
			Blind cap	DN50，G1/4"	2	EA
			screw glue	Loctite™ 569	1	Bottle
			wrapping belt	NA	1	EA
3	brine clamp	12026970	Brine clamp	Ø175mm~187mm	5	EA
4	Brine seal	11101925	Brine seal	OG-50	8	EA
5	XP 52 IC AIT Skid	12026968	AIT skid	XP 52 IC	1	SET
6	Fiber repair kit III - Fiber repair essentials	10380920	Fiber Repair Pins	NA	1	Set
			Glue	NA	1	Bottle

At the first time of use, the air supply apparatus parts need to be assembled after taken out from the packaging box. Please assemble the included parts together according to the below photo (maybe a drawing), then install the assembled apparatus onto the frame of AIT skid. Connect three PU tubes to the quick connectors of the apparatus, the approximate length of tube connecting to the inlet, outlet and discharge connector is about 5m, 2m and 1m respectively.

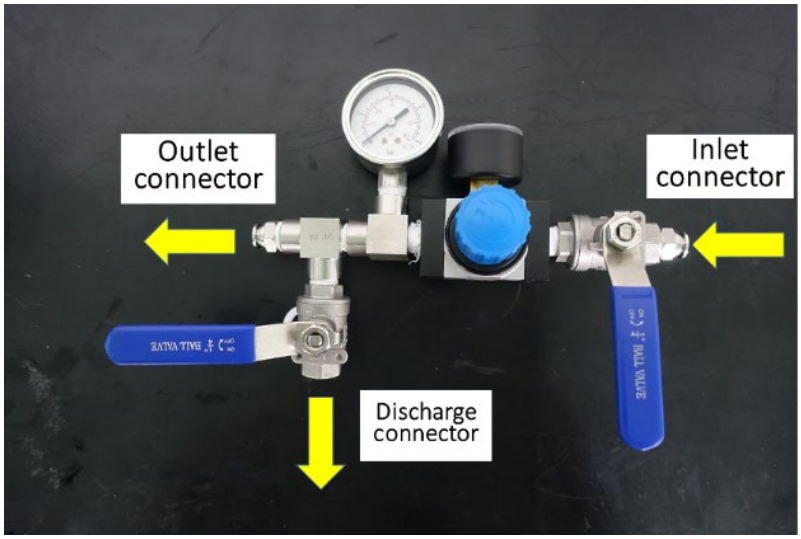

Figure 26: Air Supply Apparatus

Figure 27: Air Supply Apparatus installed on the test rack

12.2 Leakage hunting and Fiber Repair of DuPont ™ IntegraTec™ XP 52 IC Module

CAUTION	
	Wear personal protective equipment all times during the fiber repair work.

12.2.1 Install DuPont ™ IntegraTec™ XP 52 IC module in the AIT Rack

a) Place the AIT skid vertically on flat ground/floor.

b) Pull out the locking bolt at side of the supporting frame, rotate the moving frame to horizontal position, then lock the frame again.

c) Put the problematic module onto the left side (on two saddles) of the skid, note that the filtrate end (with brine holes and filtrate cap) of the module should be placed at upper end of the moving frame. Adjust filtrate end position, ensure the protrusion column at the lower clamp sliding into the bottom brine hole, then cover the upper clamp and tighten manually.

d) Unscrew filtrate cap at anti-clockwise direction by plastic wrench and uninstall it from the module.

e) Assemble the feed cap (at clockwise direction) and tighten it with the plastic wrench.

f) Move the module to the right side of the skid, lock the module with two metal bars.

Figure 28: Install Modules to the Rack

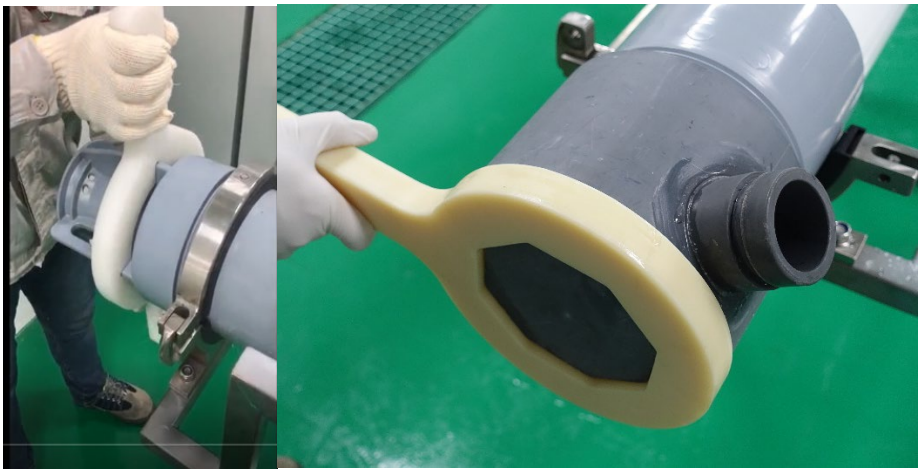

Figure 29: Disassemble filtrate cap and assemble feed cap

12.2.2 Install Seals and Connectors to DuPont ™ IntegraTec™ XP 52 IC Module

a) Plug the brine holes with three brine seals, please be noted that the brine holes are not uniform in shape, so only three consecutive brine holes with certain shapes can be plugged tightly by one brine seal. Remain three holes open at top side.

b) Fill clean water (better or equal to UF filtrate quality) into module through port at the feed cap, until water overflows at the open brine holes.

c) Plug the remaining holes with brine seals, install the metal brine clamp and screw it tightly with a hexagon head screw driver.

d) Assemble the plastic couplings and blind plate with quick connector to the feed port, then connect air tube to the quick connector.

e) Open inlet valve of air supply apparatus, squeeze water to the filtrate side, the purpose of this step is to wet fiber pores. Close the inlet air valve once no continuous water stream coming out from the fiber.

f) Unlock the moving frame, then rotate it to vertical position, and lock it again.

Figure 30: Fill Module with clean water

Figure 31: Assemble the brine seals and clamp

Figure 32: Install air tube to the feed port

12.2.3 Fiber Repair and Integrity Test

a) Open the air inlet valve, then adjust air pressure to about 15psi.

b) Rinse the filtrate surface with clean water, look carefully at the points where intensive bubbles are seen, locate each point of leakage and insert repair pin, proper location and plugging will alleviate air bubbles if there are more than one leakage point. Plug any fibers that create bubbles.

NOTE	
	Air diffusion though intact membrane fibers will form small fine bubbles. Fiber ruptures are characterized by large and turbulent bubbles.

a) After all leakage points are located and plugged by repair pins, open air discharge valve and use compressed air (swish potting surface while holding PU tube connected to air discharge connector) to wipe out excessive water on the potting surface.

b) Close air discharge valve and air inlet valve.

c) Apply instant adhesive (Loctite™ 406) to thin end of new repair pins, replace all pins plugged previously one by one, be careful not to plug wrong fibers mistakenly.

d) Wait 5min until the glue get cured, then use scissors to cut off the tails of all pins along the potting surface.

e) Open the air inlet valve, displaced water may flow out through the filtrate side. Rinse clean water on the potting surface, visually check if there are any remaining breaking points. Allow pressure to get stable at about 20psi, then close air inlet valve.

f) Record the pressure value and start to time for 5mins, then record the pressure value again. Pressure decay value less than 2 psi between start and end time is regarded as acceptable, so if the actual pressure decay value is within this range, it means the module is successfully repaired.

NOTE	
	Leaks in the connections of instruments, hoses end-caps and gaskets can cause failures in pressure decay test.

a) Open the discharge valve, depressurize the module until the pressure returns to ambient level.

b) Take off air tube from quick connector at the feed cap.

Figure 33: Locate leaking fibers and plug with pins

Figure 34: Apply instant adhesive to repair pins

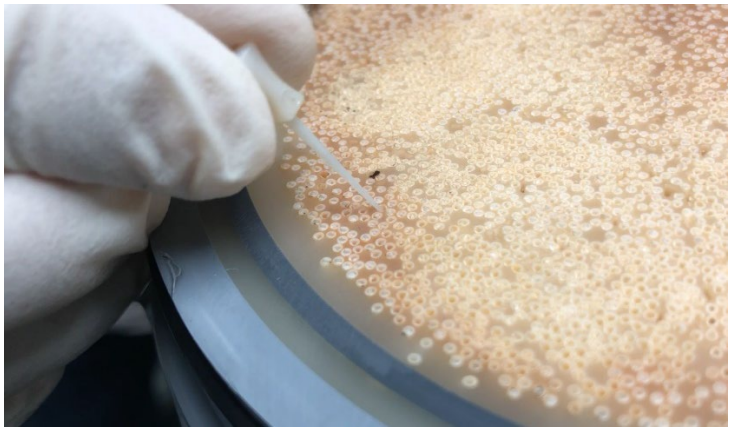

Figure 35: Repair leaking point with glued pins

Figure 36: Measure Pressure decay for 5mins

12.2.4 Reinstall Filtrate Cap and unload from AIT Skid

a) Unlock the moving frame and turn it to horizontal position, then lock it again.

b) Disassemble brine clamp and remove all brine seals.

c) Move UF module to the left side of the frame, adjust module position until the protrusion column of the lower clamp is sliding into the bottom brine holes, then cover the upper clamp and tighten it manually.

d) Disassemble the feed cap by assistance of plastic wrench.

e) Please take off O-ring from filtrate end and check if there is any damage existing, any broken or scratched O-ring should be replaced by new one (O-ring 155.0ID x 3.55MM, supplied by DuPont). Apply glycerin or other food grade lubricant to O-ring, and to inner surface of filtrate cap. Reassemble O-ring to the module, then install filtrate cap, screw the cap tightly with the assistance of plastic wrench.

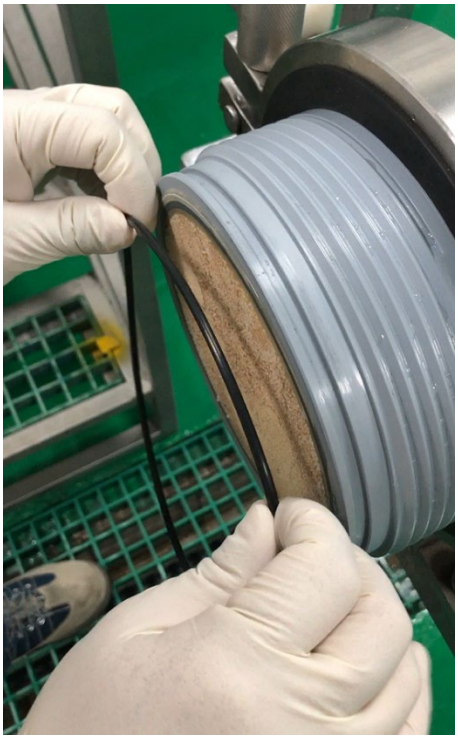

Figure 37: Inspect O-ring intactness

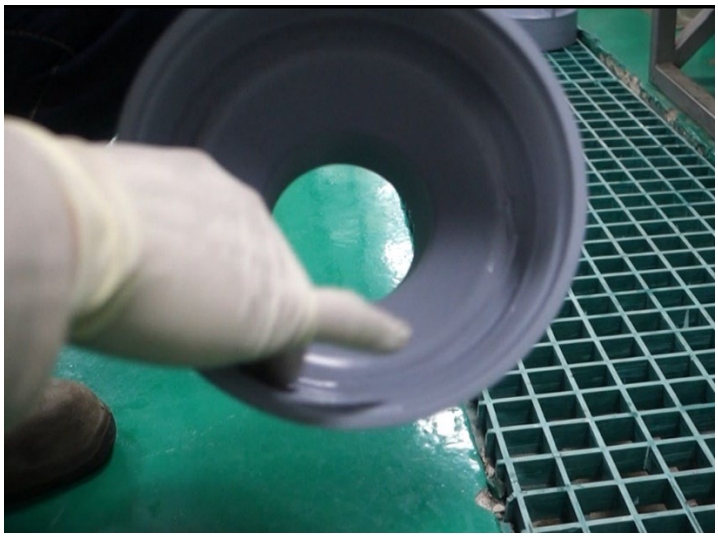

Figure 38: Apply lubricant to the inner surface of filtrate cap

Figure 39: Assemble filtrate cap

Figure 40: end cap after

13 Addendum

13.1 Terminology

Air Scour	Cleaning method where air is used to shake the fibers and help to dislodge the solids from its surface. Also known as Air Scrub.
Backwash	Hydraulic cleaning method where filtrate water is pumped from the filtrate to the feed side of the membrane in order to remove accumulated foulants. Also known as Backflush or Backpulse.
Bleed-Mode Operation	Flow pattern where most of the feed water will pass through the membrane while the rest will get out of the membrane element directly through the concentrate side (typically 5 – 15% of the feed flow). This concentrate stream will carry part of the contaminants out of the elements and is normally sent to waste.
BOD (Biological Oxygen Demand)	Similar to COD except BOD detects substances that are susceptible to biological oxidation which indicates biologically active organics. Therefore COD & BOD can be used to characterize the organic load of water. Expressed as mg/L of Oxygen.
Chemically Enhanced Backwash (CEB)	Chemical cleaning method, typically initiated automatically, where some chemicals are added into the Backwash stream in order to improve the effectiveness of the cleaning. Usually includes a soaking step.
Clean-In-Place (CIP)	Chemical cleaning method, typically initiated manually, where one or several chemical solutions are consecutively applied in the ultrafiltration trains in order to restore clean membrane condition.
COD (Chemical Oxygen Demand)	It is a measure of the amount of compounds in a sample which have been oxidized by a strong oxidizing agent. Although inorganic substances such as Fe may also be subject to oxidation, for most natural and industrial waters, the matter to be oxidized is organic in nature.
Concentrate	The water stream leaving the membrane system as waste.
Conductivity	The electrical conductivity of water is linearly related to the total dissolved solids (TDS). It is the ability of the water to conduct an electrical current. Expressed in µS/cm.
Cross-Flow Operation	Flow pattern where the concentrate flow exceeds the filtrate flow passing through the membrane (typically in a ratio of 5:1 or higher). The concentrate stream is then typically recycled back to the feed. This allows increasing the flow velocity through the feed channels and therefore achieving a shear force effect that helps to reduce membrane fouling.
Dalton	Unit of mass (Symbol: Da), typically used as unit to measure the molecular weight cut-off of the ultrafiltration membranes.
Dead-End Operation	Flow pattern, also known as “Deposition Mode”, where all the feed volume entering the system flows through the membrane (i.e., there is no waste stream) and is collected in the filtrate side, while the foulants build up on the membrane.
Direct Integrity Test	Physical test applied to a membrane unit to detect integrity breaches.
DOC (Dissolved Organic Matter)	Fraction of TOC which is dissolved (filtered through 0.45 µm).
Feed	The water stream entering the membrane system.
Filtrate	The water stream that goes through the membrane and is free from impurities.

Flux	The throughput of a membrane filtration system expressed as flow per unit of membrane area (e.g., gallons per square foot per day (GFD) or liters per hour per square meter (LMH).
Fouling	The gradual reduction in filtrate flow at constant pressure (or increase in transmembrane pressure at constant filtrate flow) due to adsorption or deposition of contaminants within or on the membrane.
Hollow-Fiber Module	A configuration in which hollow-fiber membranes are bundled horizontally or vertically and either encased in a pressure vessel or submerged in a tank.
Indirect Integrity Test	Some filtrate water quality parameter is monitored to detect compromised membrane units.
Integrity Breach	Any leak in the membrane system that could lead to by-pass of feed to filtrate side, and hence contamination.
Log Removal Value (LRV)	Filtration removal efficiency for a target organism, particulate, or surrogate expressed as $\log_{10}$ [$\text{Concentration}_{\text{feed}}/\text{Concentration}_{\text{filtrate}}$].
Lumen	The bore or inner side of a hollow-fiber.
MEV	Multi Element Vessel. A pressure vessel where the filtration modules are installed. A single MEV can handle multiple membrane modules and is designed to withstand the feed water pressure and temperature according to the process requirements.
Microfiltration	A pressure-driven membrane filtration process that typically employs hollow-fiber membranes with a pore size range of approximately 0.1 – 0.5 µm.
Module	This refers to the simplest unit composed of the membranes, the vessel, the end-caps, the feed and air inlets, the filtrate outlet and the waste outlet. Several modules form a membrane train, rack, bank or vessel.
Molecular Weight Cut-off or MWCO	Lowest molecular weight (expressed in Daltons) in which 90% of the solute is removed by the membrane.
Normalization	Industry practice for correcting variations that would otherwise appear as a filtrate flux or TMP change, and lead to misinterpretations of the membrane process performance (e.g., a decrease in permeability that would mistakenly be interpreted as fouling, when it is only due to a decrease in water temperature)
O&G	Oil & Grease, Hydrocarbons. Even in very small quantities i.e., < 0.05 mg/L, it can cause accelerated fouling in membranes.
pH	It is a numeric scale used to express the acidity or alkalinity of the water. Solutions with a pH less than 7 are acidic and solutions with a pH greater than 7 are basic. Pure water has a pH of 7 and is neutral. In water, high pH causes a bitter taste, water pipes and equipment become encrusted with deposits. Low-pH water will corrode or dissolve metals and other substances.
Permeability	The capability of a membrane to allow the flow of water. It is the best indicator for membrane performance. It is calculated as Flux divided by TMP and expressed in LMH/bar or gfd/psi, and is typically temperature-corrected (i.e., “normalized”) to 20°C or 25°C.
Pore Size	The size of the openings of a porous membrane, expressed either as nominal (average) or the absolute (maximum), typically in terms of microns.
Recovery	The ratio of feed water that is converted to filtrate. Recovery equals to filtrate flow produced by the membrane unit divided by the feed flow and is expressed as percentage.
SDI (Silt Density Index)	Fouling Index. This parameter provides an indication of the particulate fouling potential of the water. It is based on the measurement of the time it takes to collect 500 mL of water sample

	through a paper filter of 0.45 µm at the start of the test and after the water has flowed through the filter for 15 minutes.
Self-cleaning filter	A mechanical device to prevent large debris from entering the UF Modules. Self-cleaning filters can be installed inside the MEV pressure vessels or as a separate equipment and are designed with screens ranging from 100 to 300 micron.
Silica	Can be present as Reactive Silica (Soluble) or Un-Reactive Silica (Colloidal). Colloidal form can cause fouling in membrane systems.
Specific Flux	Synonymous with permeability.
SUVA (Specific UV Absorbance)	Ratio between UV_{254} and DOC (if > 4, mostly humic matter; if < 2, indication of algae bloom).
TMP	Transmembrane Pressure (bar or psi). It is the pressure difference between the feed and the filtrate side of the UF module or vessel.
TOC (Total Organic Carbon)	It is the most widely used parameter to determine the organic content in water. It includes Natural Organic Matter (NOM) and synthetic sources. It is indicative of the tendency of the water to cause organic fouling and biofouling in membranes. It is expressed in mg/L.
Top attachment plate	Component that separates the filtrate water from the feed water. The permeate port of each module attaches to this plate using water tight adapters.
TSS (Total Suspended Solids)	It is the measure of the total weight of solids contained in a water sample, and is expressed in mg/L. This parameter is more accurate than turbidity (i.e., turbidity usually does not detect very fine particles).
Turbidity	Sediments, clay, silt, small particles, solids etc. cause a liquid to appear turbid, “hazy”. These particles can, besides, host or shield microorganisms like bacteria and viruses. Turbidity is measured by the intensity of light that passes through the water sample and expressed in NTU (Nephelometric Turbidity Units). DuPont Ultrafiltration gives consistent product water with turbidity values < 0.1 NTU.
Ultrafiltration	A pressure-driven membrane filtration process that typically employs hollow-fiber membranes with a pore size range of approximately 0.01 – 0.05 µm.
UV_{254} Absorbance	It is an indirect measurement of NOM, based on the fact that most organics compounds can absorb UV light. Expressed in cm^{-1}. Surrogate of TOC.

13.2 Acronyms

ANSI	American National Standards Institute
ASME	American Society of Mechanical Engineers
AS	Air Scour
BOD	Biological Oxygen Demand
BW	Backwash
CDPH	California Department of Public Health
CEB	Chemically Enhanced Backwash
CIP	Clean-In-Place
COD	Chemical Oxygen Demand
DOC	Dissolved Organic Carbon
DWS	DuPont Water Solutions
EDI	Electrodeionization
FRP	Fiberglass-reinforced plastic
GAC	Granular Activated Carbon
GFD	U.S. gallons/ft2/day
gpm	U.S. gallons/minute
IER	Ion Exchange Resins
kDa	Kilodalton
LMH	Liter/m2· h
LRV	Log Removal Value
MF	Microfiltration
MWCO	Molecular Weight Cut-Off
NF	Nanofiltration
NSF	National Science Foundation
NOM	Natural Organic Matter
NPSH	Net Positive Suction Head
NTU	Nephelometric Turbidity Units
OEM	Original Equipment Manufacturers
O&G	Oil & Grease
PAG	Powder Activated Carbon
PDT	Pressure Decay Test
PES	Polyethersulfone
PLC	Programmable Logic Controller
PP	Polypropylene
PS	Polysulfone
PSI	Pounds per square inch
PVDF	Polyvinylidene Difluoride
RO	Reverse Osmosis
SCADA	Supervisory Control And Data Acquisition
SDI	Silt Density Index
SUVA	Specific UV Absorbance
TDS	Total Dissolved Solids
TMP	Transmembrane Pressure
TOC	Total Organic Carbon
TSS	Total Suspended Solids
UF	Ultrafiltration
WAVE	Water Application Value Engine

Process diagrams courtesy of Fluytec S.A.

All information set forth herein is for informational purposes only. This information is general information and may differ from that based on actual conditions. Customer is responsible for determining whether products and the information in this document are appropriate for Customer's use and for ensuring that Customer's workplace and disposal practices are in compliance with applicable laws and other government enactments. The product shown in this literature may not be available for sale and/or available in all geographies where DuPont is represented. The claims made may not have been approved for use in all countries. Please note that physical properties may vary depending on certain conditions and while operating conditions stated in this document are intended to lengthen product lifespan and/or improve product performance, it will ultimately depend on actual circumstances and is in no event a guarantee of achieving any specific results. DUPONT ASSUMES NO OBLIGATION OR LIABILITY FOR THE INFORMATION IN THIS DOCUMENT. References to "DuPont" or the "Company" mean the DuPont legal entity selling the products to Customer unless otherwise expressly noted. NO WARRANTIES ARE GIVEN; ALL IMPLIED WARRANTIES OF MERCHANTABILITY OR FITNESS FOR A PARTICULAR PURPOSE ARE EXPRESSLY EXCLUDED. No freedom from infringement of any patent or trademark owned by DuPont or others is to be inferred.
DuPont™, the DuPont Oval Logo, and all trademarks and service marks denoted with ™, SM or ® are owned by affiliates of DuPont de Nemours, Inc. unless otherwise noted. © 2026 DuPont. All rights reserved

Have a question? Contact us at:
www.dupont.com/water/contact-us

Form No. 45-D04596-en, Rev 2
January 2026